BOARD OF TRUSTEES
Village of Watkins Glen
OFFICIAL NOTICE OF REGULAR MEETING
October 21, 2025

A regular meeting of the Board of Trustees for the Village of Watkins Glen will be held on October 21, 2025 at **5:00 pm** in the Board Room of the Municipal Building, 303 North Franklin Street, Watkins Glen, New York.

AGENDA

1. **PLEDGE OF ALLEGIANCE**

2. **NEW ADDITIONS TO AGENDA**
   a. _____
   b. _____
   c. _____

3. **PRSENTATIONS**
   a. Alyssa Morse, MPH – Public Health Specialist – Schuyler County Public Health

4. **PUBLIC BE HEARD**
   a. _____
   b. _____
   c. _____

5. **APPROVAL OF MINUTES**
   a. Minutes for the regular board meeting held on October 7, 2025.

6. **REPORTS**

a.	Parks	☒Attached
b.	Streets/B&G	☒Attached
c.	Code Enforcement	☐Attached
d.	Water	☐Attached
e.	Electric	☒Attached
f.	Joint Wastewater/Collections	☒Attached
g.	Police	☐Attached
h.	Fire	☐Attached
i.	Treasurer's	☐Attached

The Board of Trustees meets on the first and third Tuesday of the month at 5:00pm in the Board Room of the Municipal Building. All meetings are voting meetings, which opens with a public comment period. Meeting agendas are created from prior public input, Department operating and planning issues and requests made to the Board. The Board reserves the right to limit verbal comments to three minutes if necessary and to request written comments on lengthy or complex issues. This information may then be used to create committee agendas, with the speaker or author invited to attend.
This institution is an equal opportunity provider and employer

BOARD OF TRUSTEES
Village of Watkins Glen
OFFICIAL NOTICE OF REGULAR MEETING
October 21, 2025

7. VOTING ITEMS ("*" = supporting documentation attached)

a. *Approve the purchase of two (2) submersible sewer pumps from Gartner Equipment in the amount of $5,900. (Tabled 10/7)
b. *Approve STBOA Training for the Code Enforcement Officer on 12/10 -12/12. Cost is $250 plus mileage, to be spilt with the Town of Reading.
c. *Approve the sewer credit request for 240 N. Glen Ave. in the amount of $126.00
d. *Approve the Member Application for Use of Village Fire Hall by James Spencer for a birthday party to be held on Saturday, November 8, 2025 from 10a – 3p.
e. *Approve the 2025-2026 Evening SRO Agreement
f. _____
g. _____

8. AUDIT

a. General Audit dated October 20, 2025 for the total amount of $292,894.35

9. BOARD CONCERNS/NEW BUSINESS

a. _____
b. _____
c. _____
d. _____

10. ADJOURNMENT

The Board of Trustees meets on the first and third Tuesday of the month at 5:00pm in the Board Room of the Municipal Building. All meetings are voting meetings, which opens with a public comment period. Meeting agendas are created from prior public input, Department operating and planning issues and requests made to the Board. The Board reserves the right to limit verbal comments to three minutes if necessary and to request written comments on lengthy or complex issues. This information may then be used to create committee agendas, with the speaker or author invited to attend.
This institution is an equal opportunity provider and employer


Public Health
Schuyler County, NY
PHAB
Say
Boo!
to the flu,
COVID, & RSV
too!
Get your vaccines
before Halloween!
schuylercounty.us/vaccines

2025 Rabies Clinics

Saturday, February 15th
10am-12pm
Shared Services Building
910 S Decatur St, Watkins Glen

Saturday, April 12th
10am-12pm
Humane Society of Schuyler County
124 Marina Drive, Montour Falls

Saturday, May 17th
10am-11am
Town of Reading
3951 NY-14A, Watkins Glen

Monday, June 23rd
6pm-7pm
Cayuta Town Barn
6362 NY-224, Cayuta

Thursday, September 18th
6pm-6:45pm (cats and ferrets ONLY)
6:45p-7:30p (dogs, cats, and ferrets)
Shared Services Building
910 S Decatur St, Watkins Glen

Saturday, October 18th
10am-12pm
Humane Society of Schuyler County
124 Marina Drive, Montour Falls

Saturday, November 8th
10am-11:30am
Monterey Fire Department
1465 South St, Beaver Dams

No cost, but donations are appreciated!

- Cats, dogs, and ferrets must be **at least three months old.**
- Cats and ferrets **must** be in a carrier (top-loading carrier preferred).
- **One** animal per carrier.
- Dogs **must** be on a leash.
- **Bring proof** of any prior rabies shot.
- Only bring as many animals as **you can control.**

Contact Info
106 S Perry St.
Watkins Glen, NY 14891
607-535-8140

Pre-registration is available at schuylercounty.us/rabiesclinic
Walk-ins are always welcome.

Public Health
Schuyler County, NY

Accredited Health Department · PHAB Advancing Public Health Performance · Public Health Accreditation Board

National Lead Poisoning Prevention Week
October 19th to October 25th

TIPS TO PROTECT KIDS FROM LEAD POISONING

Clean toys, floors, and window components frequently

Keep children away from peeling paint and broken plaster

Wash hands often to rinse off any lead dust or dirt, especially before eating

Check the lead recall list at cpsc.gov/recalls and remove items that are found to have lead in them

Get your child tested for lead at ages one and two

Learn more about Lead Poisoning Prevention at www.schuylercounty.us/Lead or by calling our office at 607-535-8140

Public Health
Prevent. Promote. Protect.
Schuyler County, NY

Accredited Health Department
PHAB
Advancing Public Health Performance
Public Health Accreditation Board

Public Health
Prevent. Promote. Protect.
Schuyler County, NY

SCHUYLER COUNTY COMMUNITY HEALTH ASSESSMENT

Accredited Health Department · PHAB Advancing Public Health Performance · Public Health Accreditation Board

What is the Community Health Assessment?

Every six years, Schuyler County Public Health and the local hospital system work together to create a community health assessment (CHA) and community health improvement plan (CHIP). The County plan follows New York State's Prevention Agenda, which provides a framework for how to improve the health and wellbeing of all New York residents.

What's been done?

Between January to July 2025, Public Health has

- Talked with local partners
- Held discussions with community members
- Examined health data to learn more about health needs in the county
- Analyzed the data learned from the steps to the left about the health needs in the county and identified 7 key health issues seen below

1 Preventive Services for Healthy Children

- 3 in 5 children have received the full immunization series
- 1 in 4 adolescents age 13 have completed the HPV vaccine series
- About 3 in 5 children age 1 received lead screening
- Trends for immunizations and lead screening are **improving**

2 Mental Wellbeing

Indicator	Schuyler County	Change over time	NYS Avg.
Adults with 14+ days poor mental health per month	20%	▲+33%	16%
Suicide mortality rate per 100,000*	16	▼-20%	8
Adults with depressive disorder*	24%	▲+29%	19%

* estimate unstable, interpret with caution

3 Preventive Services for Chronic Disease Prevention and Control

Schuyler County's premature death rate is far above the State average (420.2 vs 326.8 per 100K)

Cancer, heart disease, and diabetes are leading causes of death

Risk factors like smoking, physical inactivity and poor diet continue to be a concern and contribute to these leading causes of death

Leading Causes of Death in Schuyler County
Age Adjusted Deaths per 100K

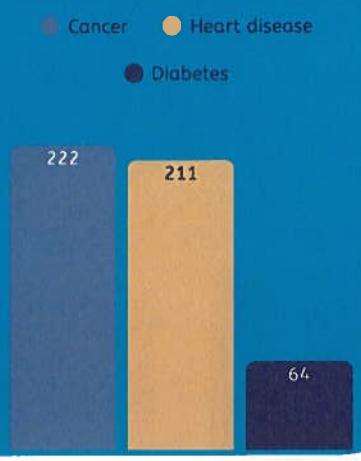

Join Us!

National Drug Take Back Day

Tobacco products are accepted!

Saturday, October 25th
10am-2pm
Odessa & Tyrone Fire Departments
&
Walmart in Watkins Glen

Dispose unused or expired medications for free and anonymously. Needles are not accepted.

Can't make it? Visit our website for confidential drop box locations.

schuylercounty.us/ODPrevention

Public Health
Prevent. Promote. Protect.
Schuyler County, NY

Accredited Health Department
PHAB
Advancing Public Health Performance
Public Health Accreditation Board

Public Health
Schuyler County, NY

What You Need to Know About Rabies Prevention

Accredited Health Department · PHAB · Advancing Public Health Performance · Public Health Accreditation Board

Why should I be worried about rabies?

Rabies is a disease that almost always leads to death once a person or animal becomes sick. Any mammal, including people, can get rabies after contact with the saliva (spit) of a rabid animal, usually from being bitten or scratched. Lucky for us, human rabies in the United States is very rare. A major reason for this is because of Public Health efforts to give rabies vaccines to household pets such as dogs, cats, and ferrets. When household pets have their rabies shot, the chances of a person getting rabies is much, much less.

What does Schuyler County Public Health do to prevent rabies in the community?

Every year, we hold free rabies clinics and investigate all animal bites or contact with wild animals in the county.

Here's how we protect people and pets from rabies:

- We check if someone had contact with an animal that might have rabies.
- We test or confine animals involved to see if they have rabies.
- We help people and pets get rabies treatment quickly if it's needed.

We also work with local police, Animal Control Officer, veterinarians, and the Humane Society to prevent rabies in our county.

What can YOU do to prevent rabies in the community?

First and foremost, make sure your pets are up to date on their rabies shots!

Talk to your vet or visit our website at SchuylerCounty.US/RabiesClinic to find a list of upcoming free rabies clinics.

Leave wildlife alone!

If you see an animal acting strangely, or are just concerned about them, don't touch them.
Call Schuyler County Dispatch at 607-535-8222.
They will send someone to check out the animal and decide next steps.

Follow these steps if you find a bat in your home:

1. Get ready: Get a small container (like a box or large can) and a piece of cardboard big enough to cover the container opening. Put on work gloves.
2. Catch the bat: Close windows and doors then turn on the light. When it lands, approach it slowly and put the container over it. Slide the cardboard under the container to trap the bat.
3. Call our office: We can talk you through any next steps needed to protect you and your family or pets from rabies.

106 S Perry St
Watkins Glen, NY 14891
SchuylerCounty.US/PublicHealth
607-535-8140

REGULAR MEETING OF THE BOARD OF TRUSTEES OF THE VILLAGE OF WATKINS GLEN HELD TUESDAY, OCTOBER 7, 2025

PLEDGE OF ALLEGIANCE

The public session of the meeting was called to order at 5:00 pm by Mayor Laurie DeNardo. Present were Mayor Laurie DeNardo, Deputy Mayor Peter G. Cherock, Trustee Bob Carson, Trustee Margaret Schimizzi, Trustee Stephen Klemann, and Village Clerk Fred Warrick. Also in attendance was Code Enforcement Officer Dennis Tremblay, Sergeant in Charge Ethan Mosher, Superintendent of Village Parks & Recreation Stacey Parrish, and Supervisor of Streets and Buildings & Grounds Scott Taylor. There were four others in attendance.

PUBLIC BE HEARD

Phil Cherry asked the board to not consider using the current survey for the ice rink because in his opinion the survey did not provide enough information.

APPROVAL OF MINUTES

Minutes for the regular meeting held on September 16, 2025

Trustee Margaret Schimizzi motioned to approve the minutes from the regular board meeting held on September 16, 2025. Trustee Bob Carson seconded the motion. The Board then voted on the motion. Mayor Laurie DeNardo abstained. All others were in favor. Motion carried.

DEPARTMENT REPORTS

Deputy Mayor Peter G. Cherock motioned to approve all department reports. Trustee Stephen Klemann seconded the motion. The Board then voted on the motion. All were in favor. Motion carried.

VOTING ITEMS

Corvette Thunder in the Glen

Deputy Mayor Peter G. Cherock motioned to approve the Special Event Application for Corvette Thunder in the Glen to be held on Saturday, May 16, 2026 from 11a-5p. A waiver of the open container law is also being requested for this one-day event. Trustee Stephen Klemann seconded the motion. The Board then voted on the motion. All were in favor. Motion carried.

KM-50 Program

Trustee Margaret Schimizzi motioned to approve the Watkins Glen Fire Department's request to reinstate the KM-50 program. Trustee Bob Carson seconded the motion. The Board then voted on the motion. All opposed. Motion denied.

2025-2026 Evening SRO Agreement

This item was tabled. The mayor will schedule a meeting with the school.

STC Services Extension

Trustee Margaret Schimizzi motioned to approve the extension of services for 2025 and for the 2026 renewal for planning technical assistance from Southern Tier Central (STC) Regional Planning & Development Board for a total of $7,000. Trustee Bob Carson seconded the motion. The Board then voted on the motion. All were in favor. Motion carried.

Resolution in Support of the Energy Choice Act

Deputy Mayor Peter G. Cherock motioned to approve a resolution in support of Congressman Nick Langworthy's Energy Choice Act and in Opposition to Government-Mandated Natural Gas Bans.

WHEREAS, affordable and reliable energy is essential to the health, safety, and economic prosperity of New York families, businesses, and communities; and

WHEREAS, natural gas remains a dependable, cost-effective, and clean-burning energy source used by millions of New Yorkers to heat their homes, cook their food, and power their businesses; and

WHEREAS, in 2019, New York State enacted the Climate Leadership and Community Protection Act (CLCPA), which mandates aggressive emissions reductions and serves as the foundation for sweeping energy restrictions, including efforts to phase out natural gas; and

WHEREAS, building on the CLCPA, Governor Kathy Hochul and the New York State Legislature in 2023 enacted provisions in the state budget banning natural gas and other fossil fuel hookups in most new residential and commercial buildings, effective 2026 for smaller buildings, and 2029 for larger buildings, thereby eliminating consumer choice and limiting access to affordable energy; and

WHEREAS, Governor Hochul has publicly supported these bans and related measures as part of her administration's climate and energy agenda, despite widespread concerns that such mandates will increase costs, strain grid reliability, and restrict energy diversity; and

WHEREAS, these top-down policies undermine affordability, threaten reliability during peak demand, and strip away the freedom of consumers and businesses to choose the energy sources that best meet their needs; and

WHEREAS, Congressman Nick Langworthy of New York and Senator Jim Justice of West Virginia introduced the Energy Choice Act (H.R. 3699, S. 1945), federal legislation that ensures state and local governments cannot restrict consumer access to natural gas and other affordable energy sources, thereby protecting freedom of choice for New Yorkers and all Americans; and

WHEREAS, the Energy Choice Act would safeguard households, small businesses, hospitals, farmers, and manufacturers from harmful government overreach and preserve access to an "all-of-the-above" energy strategy that strengthens reliability and affordability;

NOW, THEREFORE, BE IT RESOLVED, that the Village of Watkins Glen Board of Trustees supports the Energy Choice Act as introduced by Congressman Langworthy (H.R. 3699) and Senator Justice (S. 1945) and stands opposed to New York State's natural gas bans, the CLCPA-driven restrictions, and other state energy mandates that eliminate consumer choice; and

BE IT FURTHER RESOLVED, that the Village of Watkins Glen Board of Trustees urges Congress to pass the Energy Choice Act to defend consumer choice, protect energy affordability, and preserve reliable access to natural gas for New Yorkers; and

BE IT FURTHER RESOLVED, that copies of this resolution be sent to Congressman Nick Langworthy, Senator Jim Justice, the New York Congressional delegation, Senators Chuck Schumer and Kirsten Gillibrand, Governor Kathy Hochul, and leadership of the New York State Legislature.

Trustee Bob Carson seconded the motion. The Board then voted on the motion. Deputy Mayor Peter G. Cherock, Trustee Bob Carson, and Trustee Stephen Klemann were in favor. Mayor Laurie DeNardo and Trustee Margaret Schimizzi opposed for lack of more information. Motion carried.

307 N. Franklin – Illegal Sewer Lateral – Request for Extension

Deputy Mayor Peter G. Cherock motioned to approve a request from Lori Alpern of 307 N. Franklin Street to extend the 90-day notice to make her sewer lateral independent under Local Law No. 8 of 2003. Trustee Bob Carson seconded the motion. The Board then voted on the motion. The motion was approved by all board members, with a ruling to the requestor that this was a final notice granting a one-time extension of 90 days. Motion carried.

Seneca Pure Waters Assocciation – Playground Plants

Trustee Margaret Schimizzi motioned to approve Seneca Lake Pure Waters Association to begin the purchase of plants in October for plantings in Spring around the drainage ponds at Clute Park Playground, estimated as $2,380. The Pure Waters Association has committed $1,000 towards the project upon completion and another $400 to pay for the sign. Deputy Mayor Peter G. Cherock seconded the motion. All were in favor. Motion carried.

Municipal Building – Sealing Basement Windows for Police Evidence Room

Trustee Bob Carson motioned to approve the quote from Rock Stream Construction to fill in the municipal building basement window with concrete in the amount of $4,200. Trustee Stephen Klemann seconded the motion. In further discussion, the board requested that it be confirmed that the concrete be waterproofed. The Board then voted on the motion. All were in favor. Motion carried.

Submersible Pumps - Sewer

Trustee Margaret Schimizzi motioned to the purchase of two (2) submersible sewer pumps from Gartner Equipment in the amount of $5,900. Trustee Bob Carson seconded the motion. After further discussion, the item was tabled for further review with the wastewater supervisor.

Special Event Application – Accura Commercial

Deputy Mayor Peter G. Cherock motioned to approve the Special Event Application by MullenLowe for a two-day film production in Watkins Glen on 10/7 & 10/8. Trustee Bob Carson seconded the motion. The Board then voted on the motion. All were in favor. Motion carried.

Domestic Violence Awareness Month

Deputy Mayor Peter G. Cherock motioned to approve a request from Lauren Lovett for permission to hang purple ribbons in Watkins Glen for the month of October to recognize Domestic Violence Awareness Month. Trustee Bob Carson seconded the motion. The Board then voted on the motion. All were in favor. Motion carried.

NYS Tobacco Prevention Program

Deputy Mayor Peter G. Cherock motioned to approve the request from the Southern Tier Tobacco Awareness Coalition to illuminate purple in LaFayette Park on November 20th to recognize 25 years of the NYS Tobacco Prevention Program. Trustee Bob Carson seconded the motion. The Board then voted on the motion. All were in favor. Motion carried.

Village Holiday Schedule - Christmas

Trustee Bob Carson motioned to approved a change in the village's holiday schedule by observing the day after Christmas (Friday) rather than Christmas Eve Day (Wednesday) for 2025. Trustee Margaret Schimizzi seconded the motion. The Board then voted on the motion. All were in favor. Motion carried.

Trunk or Treat

Trustee Margaret Schimizzi motioned to approve Trunk or Treat at Lafayette Park lead by Village of Watkins Glen Police Department on October 31st from 6pm to 8pm. Deputy Mayor Peter G. Cherock seconded the motion. The Board then voted on the motion. All were in favor. Motion carried.

Leland Cole – New Hire

Deputy Mayor Peter G. Cherock motioned to approve the hire of Leland Cole as a seasonal laborer for Roller Skating at $16/hour effective September 26th. Trustee Stephen Klemann seconded the motion. The Board then voted on the motion. All were in favor. Motion carried.

Code Enforcement Training

Trustee Bob Carsin motioned to approve the Code Enforcement Officer to attend training in Owego on October 15th. Trustee Margaret Schimizzi seconded the motion. The Board then voted on the motion. All were in favor. Motion carried.

AUDIT

General Audit

Trustee Bob Carson made a motion to approve the general audit dated September 15, 2025 in the following amounts:

General	$101,389.54	Sewer	$112,011.54
Electric	$26,574.95	Water	$5,092.73
Joint Activity (CVWRF)	$14,799.79		
WG Comprehensive Plan	$24,000		

Trustee Margaret Schimizzi seconded the motion. The Board then voted on the motion. All were in favor. Motion Carried.

BOARD CONCERNS

Fire Department safety event is 10/08/2025

Local Law drafts for vendor law and fire pits are with village attorney. Street laws needs revisiting.

Village Christmas parade is December 5th.

Discussion on the new crossing guard and how she is doing. Discussed which crossing (12th & 15th) needs the most supervision.

Schuyler County Youth Baseball did a clean-up of the fields. Also, change in the board – President is Jesse Schubmehl.

Ice Rink survey is open to the public until 10/15/2025.

EXECUTIVE

Trustee Bob Carson motioned to move into executive for litigation. Trustee Stephen Klemann seconded the motion. The Board then voted on the motion. All were in favor. Motion carried.

ADJOURN

With no further business to come before the Board, Trustee Bob Carson made a motion to adjourn at 7:30 p.m. Deputy Mayor Peter G. Cherock seconded the motion. The Board then voted on the motion. All were in favor.

Motion carried.

Meeting Adjourned.

Fred Warrick
Village Clerk

Parks and Recreation Department Report
Village of Watkins Glen
October 14, 2025

Recreation Programs:

- Pickleball Running Daily around other scheduled events. Pickleball league began October 15th, still accepting teams
- Friday Night Roller Skate at Community Center running with 60 to 70 youth attending. Themed skate nights will continue 10/17-Wear favorite sports jersey. 10/24- Halloween Costume. 10/31- No Roller Skate. 11/7- Free Photobooth night.
- Women's Indoor Roller Derby League running Thursday Nights @ Community Center.

Clute, LaFayette & Gifford Park:

- Contract collaboration sent for pure waters plant ordering for Spring planting at Clute Park.
- Water will be shut down at Clute Park end of October. Public Bathrooms will remain open during day.
- Seasonal Parking passes for Clute Park being sold at Park Office.
- Prepared facilities weekly for upcoming rentals.
- Lafayette Park bathrooms will be shut down after Halloween weekend.
- Planning holiday events at Event Center & CC.

Clute Memorial Campground:

- Met with company for campground printer potential replacement.
- Dumpsters in campground locked at commencement of camping season.
- Porta Johns being removed end of October at parks.
- Getting quotes for red shower house bathroom materials
- Attended Chamber board meeting.
- Updated contracts and distributing seasonal contracts for 2026 camping.
- Last day of campground opening Oct 26th.
- Conducted daily campground inspections.
- Vouchers Done

Event Center, Community Center, Boat Launch:

- Met with DOH at Community Center Kitchen and received permit to prepare hot dogs and popcorn during skate. Able to utilize kitchen for other needs in future.
- Dog Obedience Classes at Community Center extended to October 28
- Women's Indoor Roller League Again running Thursday nights in CC.
- Guthrie will have mobile truck for women's health services at Lafayette Park on 10/27.
- Fund for Women in Event Center October 29th.
- United Methodist Church Craft Fair in Community Center October 25th, 9a-2p.
- Watkins High School Homecoming at EC on Nov 1.
- Craft Fair at Community Center on Nov 1, 10a-2p.
- Event Center Rentals- 6 Currently for October
- Community Center Rentals- 15 Currently for October
- Pavilion Rentals- 2 Currently for October
- Lafayette Park Rentals- 2 Currently for October

Stacey Parrish Superintendent of Parks & Recreation

Streets/Buildings and Grounds
10/10/2025—10/24/2025

Streets:

- **Safety Meeting in morning**
- **Bags and Brush**
- **Mowing and weed whacking**
- **UFPO'S**
- **Mowed diversion ditch also Bath St.**
- **Cleaned catch basins off**
- **Replaced storm sewer pipe and catch basins behind office**
- **Pulled docks for winter**
- **Serviced fleet trucks**
- **Cleaning up leaf piles**

Buildings and grounds:

- **Safety Meeting in morning**
- **Mowing in all Parks and Campground**
- **Daily garbage in park**
- **Raked swim beach/Dog beach/ kayak beach also boat launch**
- **Firewood cut and split**
- **Set up for Events**
- **Closed splash pad**
- **Replacing boards on office deck**
- **Firewood for park**
- **Oil changes on B&G trucks**

Thanks Scott

BOARD MINUTES FOR ELECTRIC DEPARTMENT

October 21st 2025

Weeks of October 5th – October 19th

- Daily substation, street light and line inspection
- UFPO's
- Safety Training / Climbing / Tailboard
- Daily Tailboard
- Meter work orders
- Service complaints / requests
- Vehicle maintenance and cleaning
- Shop maintenance and cleaning
- Meter reading / testing
- Storeroom
- Bi-weekly Manager Meeting
- Input work orders into USA CPR Ledger
- Meter replacements and upgrades
- Flag Repairs
- Mow, trim Pole Pile, Substation, Metering Station
- Street light repair and replacement
- Old snowflake rebuilding – strip, clean, paint and rewire
- Quarterly meeting with NYSEDA & SmartKable
- Transfer to new pole at Walmart -4th St., cut pole above communications.
- Service Complaint – Tree branch on wires
- Distribute disconnect tags
- Repairs to primary conductor – S Franklin
- Remove dead and hazardous tree – Division
- Install exhaust fan on Community Center kitchen
- Substation Repairs – indicator lights
- Service repairs – 8th & Porter
- Service Complaint – Holy Cow
- Repairs to Metering Station

Thank You
Tommy Ballard

JOINT WASTEWATER PLANT
REPORT
Oct 1at, 2025 –Oct 16, 2025

- Operation and maintenance of Joint WW facility
- Time sheets done
- Board reports
- Budget work
- Vouchers done
- BI-Weekly Managers meeting
- Attend JPC meeting
- Daily and weekly samples collected
- Daily rounds sheets done
- Sludge removal
- Weekly meeting with collection staff
- Safety meeting with staff
- Ops report and DMR completed for August, submitted to DEC and emailed to JPC
- Unload and install new air compressor for screw press, test unit out
- Discuss sewer install on Summit with Reading Town Supervisor
- Order work gloves for staff from Koesters
- Discuss effluent system with J. Andrew Lang, will reqoute
- Discuss lateral install with homeowner on Wedgewood Rd. Ongoing.
- Call from homeowner on Summit (Reading) discussed his plans for sewer install
- Take pump to Shrier Martin for rewire, pick up repaired pump
- Tilled around trees in plant and mulch spread around them
- Grass Cutting in plant
- Order sludge testing bottle from Microbac
- Meet with W2O rep, will quote pump for effluent system
- Discuss phosphorous issues in plant with Bob from Holland Chemical, will do jar testing
- Discuss lateral repair with homeowner at 310 5th St.
- Call Regional Equipment leaking lines on pump truck
- Cut and weld wheels onto one of the workbenches to make portable
- Oil change on pump truck
- Pick up sample bottles from office
- Clean #1 filter
- Cleaning of Admin Building
- Jar testing done 10/15 all day for both SBR1 and SBR3. Tank 1 giving issues.
- Call Koester on tubing size and GPH for chemical pumps

Regards
Terry Wilcox

Collections 10/6 to 10/12

Monday

-get pump run times

-check lift stations

-call Mike Hoyt about XTU problems with Clute park & Decatur st lift stations again

-ufpo

Tuesday

-get pump run times

-check trouble spots

-clean off floats @ Clute park, Perry st, Watkins Brewery, and Salt Point lift stations

--jet 3rd & Decatur st (trouble spot)

-ufpo Dix / ofpo Watkins x2

Wednesday

-bereavement

Thursday

-bereavement

Friday

-breavement

PRICE SOLICITATION FOR MATERIAL AND SERVICES

PROCUREMENT POLICY: "All purchases of goods and services not subject to competitive bidding will be secured by use of written requests for proposals, written quotations, verbal quotations, or any other method that assures that goods will be purchased at the lowest price and that favoritism will be avoided. Whenever possible, goods shall be purchased from local vendors. In determining the lowest price, consider the costs involved for shipping charges and/or expenses for travel and employees' time to go pick up an item."

METHOD: The following method shall be used for purchases from $1,000.00 - $9,999.00.

Estimated amount of purchase/service	Method
☐ $1,000.00 to $1,499.00	2 verbal quotations
☐ $1,500.00 to $2,999.00	3 verbal quotations
☑ $3,000.00 to $9,999.00	3 written proposals

Requisition Number: _____

Item/Service Description: **Submersible Sewer Pumps**

Vendor	Address	Quotation
1. Gartner Equipment		* $5,900
2. Goulds		$ 5,000
3. PumpCatalog (Online)		$6,944

NOTES:

* Cost is slightly higher than Goulds, but they cannot accomodate required cord length.

_____
Dept Head Signature Date

GARTNER
EQUIPMENT COMPANY, Inc.
302 Sand St., Syracuse, NY 13204
Mailing Address: PO Box 11199, Syracuse, NY 13218-1199
Email: sales@gartnerequipment.com www.gartnerequipment.com
(315) 476-8321 (800) 395-4257 Fax: (315) 476-8349
Facebook:Gartner-Equipment-Company-Inc.

TO: Watkins Glen WWTP
ATTN: Fred Warrick
FROM: Chris Larkin
RE: Hydromatic Quote

DATE: 09/16/2025
EMAIL: villageclerk@watkinsglen.us

Hello,

Thank you for your request! Your current model is obsolete. After discussion with the vendor, we are pleased to offer the following replacement:

Hydromatic HVS200M2-2
528340047
**NOTE: Please see attached dimensional print

TOTAL PRICE: $2,950.00 + Shipping

FEIGHT: Add
TAXES: Add
NOTE: Prices subject to change due to tariff increases

Thank you for the opportunity to quote your equipment needs. If you have any questions regarding this quote or would like to place an order, please do not hesitate to contact us. We appreciate your business!

It's important that all material and shipments be inspected prior to signing Bill of Lading. If questionable, receiver shall mark Bill of Lading "POSSIBLE DAMAGE."

Thank you,
Chris Larkin – chris@gartnerequipment.com
sdv

Fred Warrick

From: Chris Larkin <chris@gartnerequipment.com>
Sent: Friday, October 3, 2025 2:46 PM
To: Fred Warrick
Cc: Marianne Alexander; Terry Wilcox
Subject: RE: Hydromatic Quote Watkins Glen
Attachments: DOC274 Qte..pdf; HPG200 - Dimensional Data Original pumpDim.pdf; Watkins Glen WWTP Grinder Submittal 025.pdf

Fred

Yes, your price is still as quoted, and our offer was for a 35' cord. 230 v/1ph//60hz. Please see attached submittal documents and confirm all before we place your order.

Pease Note: As we discussed your original pump is obsolete. The replacement is **dimensionally different**. You may need to make changes to your pump station.

Thank You

Chris

Christopher Larkin
Gartner Equipment Company
315-476-8321
www.Gartnerequipment.com

From: Fred Warrick <villageclerk@watkinsglen.us>
Sent: Friday, October 3, 2025 1:00 PM
To: Chris Larkin <chris@gartnerequipment.com>
Subject: Hydromatic Quote

Chris,

I am sending this quote to the board for approval on 10/7. Just confirming that the price is still the same and that the cord is 30' at minimum.

Thank you,

Fred Warrick
Village Clerk
303 North Franklin Street

528340047

Hydromatic Home Page | View Grinder Pumps Products | View manuals for 528340047

Home / Hydromatic / Grinder Pumps / 528340047

Image shown may not be actual product

HYDROMATIC

528340047

0 reviews

Pentair Hydromatic 528340047 HV200 Series Grinder Pump, Model HVS200M2-2-35. 2 HP, 230 Volts, 60 Hz, 1 Ph (Single Phase), 3450 RPM, Capacitor start/run Motor. 1-1/4" NPTF Discharge, Type 21 Seal. Cast Iron Housing & Casing, 416 Stainless Steel Shaft, 316 Stainless Steel / CF8M Semi-Open 8-Vane Impeller, 440C Hardened Cutter, Radial Single Row Ball 6203 (Upper) / Double Row Angular Contact 3205A (Lower) Bearings. 35' SOOW 12-7 Cord.

PUMP CATALOG PRICE

Retail Price: $3,472.00

Item: 528340047 | Model #: HVS200M2-2-35

GOULDS WATER TECHNOLOGY xylem

Technical brochure
BAGSSERIES R7

AGS series

Axial grinder pumps

Model # AGS 2012

$ 2500.00

xylem

Features

Design: Capable of grinding domestic sewage in the modern wastewater stream.

Cutter system: Stainless steel, axial lobe-cutter design with 8-hole cutting plate, capable of 4.9 million bites per hour and TDH up to 120 feet.

Impeller: Cast Iron semi open 2 vane impeller.

Casing: Cast iron, volute type for high efficiency. Adaptable for guide rail system.

Motor: Fully submerged in oil-filled chamber. High grade turbine oil surrounds motor for more efficient heat dissipation, permanent lubrication of bearings and mechanical seal, and protection against outside environment.

Motor shaft: 300 series stainless steel.

Designed for continuous operation: Pump ratings are within the motor manufacturer's recommended working limits, can be operated continuously without damage when fully submerged.

Applications

Designed for residential/light commercial/small office sewage (2" pump replacement and new construction) or anywhere modern wastewater flushables are creating clogging issues.

Specifications

Pump:

- Capacities: to 53 gpm/12 m³/hr
- Total heads: to 120 ft/ 36.6m TDH
- Temperature: Class F insulation - 104°F (40°C) maximum continuous, 140°F (60°C) maximum intermittent
- Single mechanical seal: silicon carbide rotary/silicon carbide stationary, 300 series stainless steel metal parts, BUNA-N elastomers
- Fasteners: 300 series stainless steel
- Axial cutter and plate: 440C hardened stainless steel

Bearings: Upper and lower single row sealed ball bearings for precision positioning of parts and to carry all radial and thrust loads.

Mechanical seal: Hardfaced silicon carbide on silicon carbide for longer life, stainless steel metal parts, BUNA-N elastomers.

Power cable: Severe duty rated, oil and water resistant. Epoxy seal on motor end provides secondary moisture barrier in case of outer jacket damage and to prevent oil wicking.

O-ring: Assures positive sealing against contaminants and oil leakage.

Paint: Electro-coat paint process protects all casting surfaces.

May be used with optional guide rail. See Fittings or Pump Removal Systems.

Agency listings

Tested to UL 778 and CSA 22.2 108 Standards
By Canadian Standards Association

Motor:

- Single-phase motor with on winding thermal protector. No external capacitor kits required.
- Class F insulation
- Shaft: 300 series stainless steel threaded design
- Bearings: Single row sealed ball bearings, upper and lower
- Power cord with a 115V or 230V NEMA three prong grounding plug. Allows connection to a piggyback float switch. 20 foot long cable. 2HP version has bare leads

Model information

Order number	HP	Phase	Volts	RPM	Float switch style	Maximum amps	Discharge size	Impeller diameter	Power cord	Weight lbs. (kg)
AGS0511	0.5	1	115	3500	Manual / no switch	9	2"	3.5"	20' SJTOW with NEMA plug	65 (29.5)
AGS0511PB					Piggyback float switch					
AGS0512			230		Manual / no switch	4.5				
AGS0512PB					Piggyback float switch					
AGS1011	1		115		Manual / no switch	11		4.25"		
AGS1011PB					Piggyback float switch					
AGS1012			230		Manual / no switch	5.5				
AGS1012PB					Piggyback float switch					
AGS2012	2		208-230		Manual / no switch	15	1.25"	5.69"	20' STOW with bare leads	96 (43.5)

*** part numbers with PB suffix include an A2E series mechanical float switch**

Performance curves

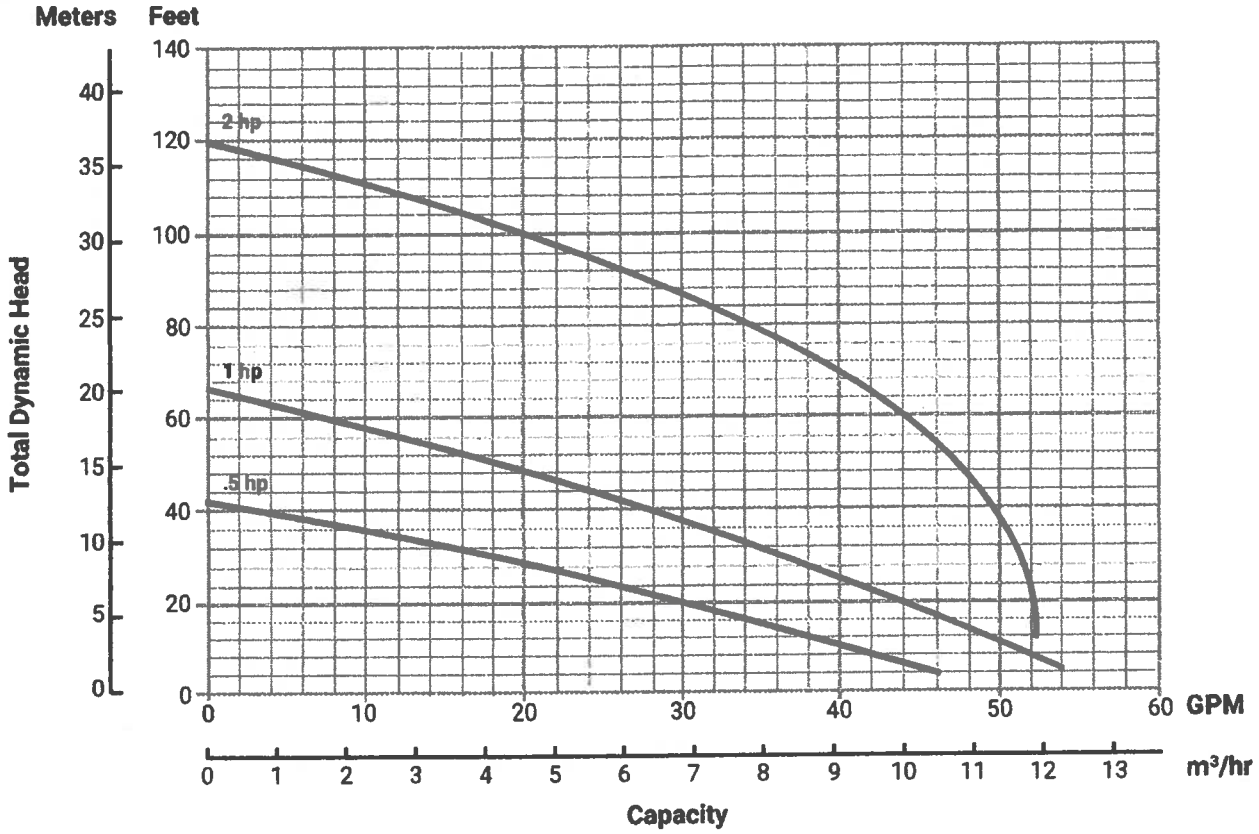

Motor data

HP	Volts	Phase	RPM	Maximum amps	LRA	Resistance Line-line	Power cable	Fuse/circuit breaker
0.5	115	1	3500	9	46	0.6	SJTOW 14/3	15
	230			4.5	25.5	2.6		10
1	115			11	46	0.6		15
	230			5.5	25.5	2.6		10
2	208-230			15	59	1.1	STOW 14/3	30

Dimensions (All dimensions are in inches. Do not use for construction purposes.)

AGS 0511, 0512 & 1011 (in inches):

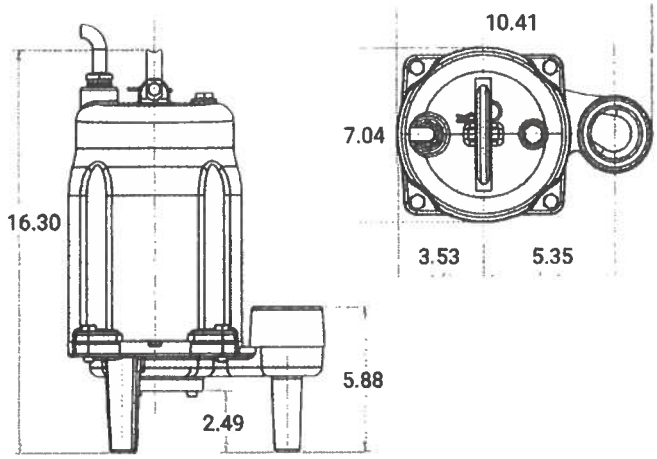

AGS 2012 (in inches):

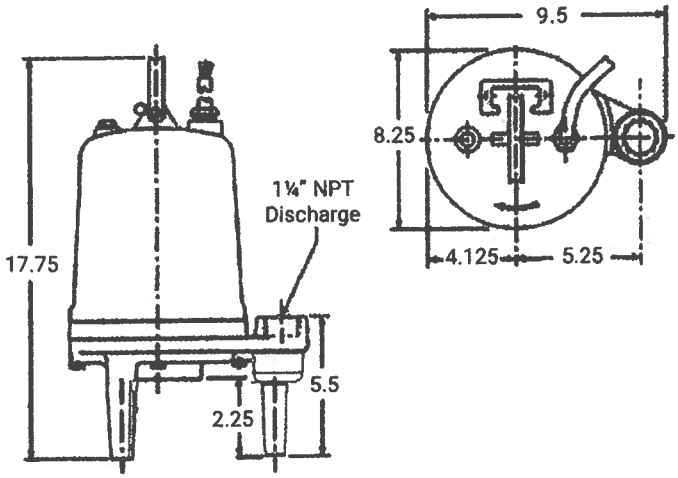

Application data

Minimum casing thickness	5/16"
Casing corrosion allowance	1/8"
Maximum working pressure	50 psi
Maximum submergence	50 feet
Minimum submergence	Fully submerged for continuous operation
	6" below top of motor for intermittent operation
Maximum environmental temperature	40°C (104°F) continuous operation
	60°C (140°F) intermittent operation
Maximum number of evenly distributed starts per hour	10
Bearings	B-10 life of 30,000 hours min.
Minimum basin size	Simplex – 24" x 24"
	Duplex – 36" x 36" fiberglass
2" Maximum discharge pipe diameter	Requires a minimum flow of 21 gpm to maintain a 2 ft./sec. scouring velocity

Construction details

Power cable – type	14/3 SJTOW with NEMA Plug
	14/3 STOW with bare leads for 2HP
Motor cover	Gray cast iron - ASTM A48, Class 30
Bearing housing	Gray cast iron - ASTM A48, Class 30
Seal housing	Gray cast iron - ASTM A48, Class 30
Casing	Gray cast iron - ASTM A48, Class 30
Impeller	Gray cast iron - ASTM A48, Class 30
Motor shaft	AISI 300 series stainless steel
Motor design	NEMA 48 frame, oil filled with Class F insulation
Motor overload protection	On winding thermal protector - auto reset
External hardware	300 series stainless steel
Impeller type	Semi-opened with pump out vanes on back shroud
Cutter	Type 440C hardened stainless steel
Oil capacity – motor chamber	.57 gallons

Standard parts

Ball bearing – upper	Single row ball – SKF 6203-2Z
Ball bearing – lower	Single row ball – SKF 6204-2Z
Mechanical seal	Silicon carbide/silicon carbide; Type 16
O-ring – motor cover	BUNA-N, AS 568A-166

Cutter assembly

8-hole cutting ring

3 lobe cutter

Standard panel options

Pump order number	K-series		Boulay series	
	Simplex	Duplex	Simplex	Duplex
AGS0511	KS19020WF	KD19020WF	S10020	D10020
AGS0512	KS19020WF	KD19020WF	S10020	D10020
AGS1011	KS19020WF	KD19020WF	S10020	D10020
AGS1012	KS19020WF	KD19020WF	S10020	D10020
AGS2012	KS19020WF	KD19020WF	S10020	D10020

Note: Boulay series part numbers have additional available features, see below for more information.

Note: K-series panel part numbers include floats, to order without float switches, remove the 'WF' suffix. Boulay series panels do not include float switches.

K-series

- NEMA 4X dead front outdoor rated enclosure
- Red LED alarm beacon
- HOA selector switch
- Field wiring terminal block
- Single phase models handle 120, 208 and 230V service
- Three phase models handle 200, 230 and 460V service
- Requires separate control/alarm power feed
- See brochure "BCPKSDPANELS" for additional information

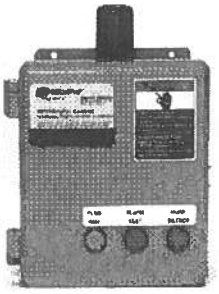

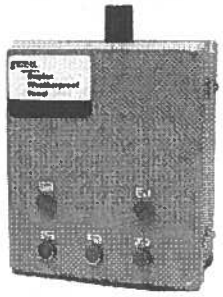

Boulay series

- NEMA 4X outdoor rated enclosure
- Red alarm beacon
- HOA selector switch
- Through door pump run light(s)
- Through door alarm test and horn silence button
- Single phase models handle 120, 208 and 230V service
- Three phase models handle 200, 230, 460 and 575V service
- Accepts single or dual power feed
- See brochure "BCP3" for additional information on simplex models
- See brochure "BCP4" for additional information on duplex models

xylem
Let's Solve Water

STBOA Training 12/10, 12/11 and 12/12 at Tioga Downs Hotel 2384 West River Road Nichols, N.Y.

Registration will begin daily at 7:30 a.m. and training will start at 8 a.m.
There will be a total of (24) twenty-four hours of class.

Lunch daily and STBOA Annual Business Meeting on 12/11/2025

- Wednesday, December 10th
  - Ron Stark – (8 hours) 2025 Advanced In-Service training – TO# T02-07-3364 and T02-07-3365
- Thursday, December 11th
  - Ron Stark – (4 hours) 2025 Advanced In-Service training – T02-07-3363
  - Chad Haviland – (2 hours) – New Oversight 1208 class – TO# TBD
  - Chris Roth – (2 hours) – Means of Egress and Occupant Loads - T02-07-3043
- Friday, December 12th
  - Brian Tollisen – (2 hours) – Modular Construction class – TO# TBD
  - Brian Tollisen – (1 hour) – Fire tests with the Uniform Code – TO# TBD
  - Brian Tollisen – (1 hour) – Operating Permits – TO# TBD
  - Chris Roth – (2 hours) – Understanding Dryer Venting Requirements & Preventing Fires - T02-07-3127
  - Chris Roth – (2 hours) – Don't forget to inspect the Small Stuff - T02-07-3126

$250 for members/$300 for non-members
***Note: Cost of training includes membership dues for 2026**

****Note: If you attain 24 hours of training in SLMS the Advanced In-Service training with Ron Stark shall be counted for your 2026 NYS required hours.**

villagecodeenforcement24@gmail.com Switch account

* Indicates required question

Email *

Your email

What day(s) will you be attending? *

- All 3 days 12/10 -12/12
- Only 12/10
- Only 12/11
- Only 12/12
- 12/10 and 12/11
- 12/10 and 12/12
- 12/11 and 12/12

Are you a Current STBOA Member for 2025 *

- Yes
- No

N.Y.S Management Number Or NY # *

Your answer

Name of Municipality

Your answer

Name *

Your answer

Phone Number

Your answer

Payment Method *

Member and Non-member rates identified below. MAKE SURE TO HIT THE "SUBMIT" BUTTON AT THE END OF THIS FORM. Preference will be given to STBOA Members. NO CASH PAYMENTS WILL BE ACCEPTED AT THE DOOR, ALL PAYMENTS AND VOUCHERS NEED TO BE MAILED TO; P.O. BOX 4406 ITHACA, NY 14852

- Pay by Voucher by mail 3 days - (Member Rate $ 250.00) (Non-Member Rate $300.00)
- Pay by Check by mail 3 days- (Member Rate $ 250.00) (Non-Member Rate $300.00)
- Pay by Voucher individual day(s) - (Member Rate $ 120.00 a day) (Non-Member Rate $ 150.00)
- Pay by Check individual day(s) - (Member Rate $ 120.00 a day) (Non-Member Rate $ 150.00)

A copy of your responses will be emailed to the address you provided.

Submit Clear form

Navigation

About Us
Event Registration
Resources
Contact Us

Contact Us

Southern Tier Building Officials Association
P.O Box 4406
Ithaca, NY 14852

Email: stboa.org@gmail.com

October 17, 2025

D1830.000

Muriel Osborne-Petryk
240 N. Glen Ave
Watkins Glen, NY 14891

Village of Watkins Glen Board of Trustees
Watkins Glen, NY 14891

Ladies and Gentlemen:

Regarding the abnormal water usage at our home during the months of August and September: We discovered that our hot water tank had been leaking from the very bottom. A large volume of water was found on our cellar floor to about two inches. That water did not enter the sewer system.

While we do not have photographic evidence of the standing water for support, we can provide video of the flow from the tank and stills of the water leaking, which have been sent to the e-mail of Barbara Peterson, Village of Watkins Glen Deputy Clerk. The inflow to the tank has been turned off to stop the water from being lost. As a consequence, we have been without hot water for nearly a month.

We have since purchased a new tank and are currently waiting for the tank to be installed. Please find enclosed the copy of the receipt for that purchase. We hope that this will serve as evidence to forgive the unusual charges that have been assessed for our water /sewer tax bill.

Thank you for your consideration and attention in this matter. We maintain that the loss of the water that spilled was through no fault of our own.

Respectfully,

Muriel Osborne Petryk

Muriel Osborne-Pertyk

Normal 4-units
Oct bill - 25 units
Credit for 21 units
@ 6.000 / unit
$126.00

5

Barbara Peterson

From: Frank Reed <frankielr84@gmail.com>
Sent: Friday, October 17, 2025 12:19 PM
To: Barbara Peterson
Subject: Muriel Osborne-petryk hot water tank

Download full resolution images
Available until Nov 16, 2025

These are the photos and video of the issues with the hot water tank. If anything more is needed please reach out to me anytime. My phone number is +16074388769 if that's easier for contact information. Her address is 240 n Glenn ave if that's needed. Thank you

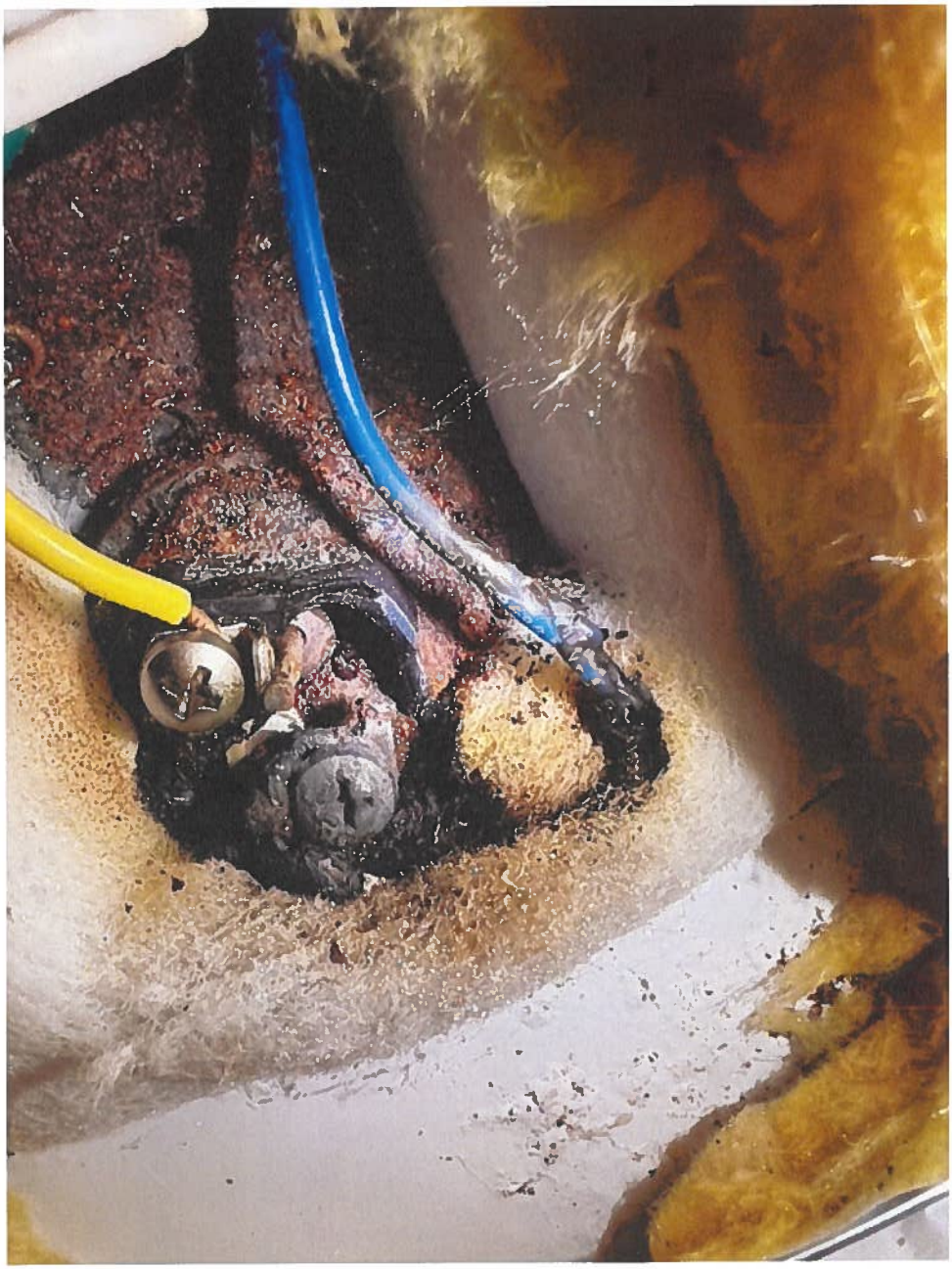

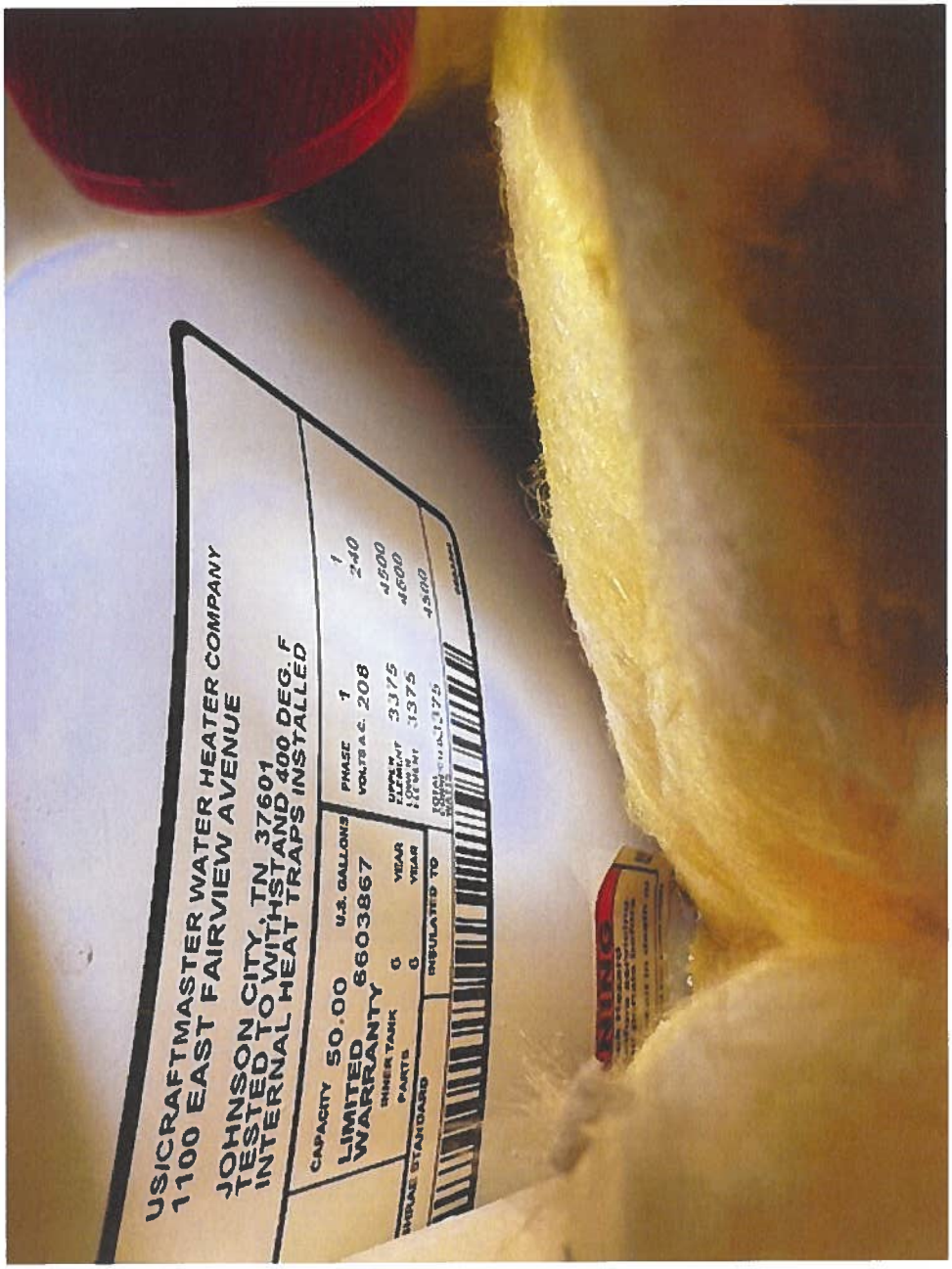

Click to Download

IMG_4664.MOV
0 bytes

Sent from my iPhone

Village of Watkins Glen
SEWER CREDIT POLICY

It shall be the policy of the Village of Watkins Glen to grant sewer credit to utility bills for either of the following incidents:

1. Should a hot water heater break and the water from that break is disbursed on the floor of your building and does not go down the sewer drain.

2. Should a pipe or pipes leak or break and the water from said pipe(s) is disbursed on the floor of your building and does not go down the sewer drain.

In order to receive sewer credit should either of these incidents happen in your building you will be required to provide the Village Office with the approximate date of the incident along with verification that the problem has been corrected.

The Village office will determine your average water/sewer usage for the prior twelve months and compare it to the water/sewer usage at the time of your water heater break or leaking pipe incident to come up with the additional units of water/sewer that were used during that incident. The number of additional units of water/sewer that was used will be provided to the Village Board, along with the dollar figure for credit to the sewer portion of your utility bill at the next Board meeting. If approval is given at the Board meeting that amount will be credited to your **sewer account only** and will be reflected on your next utility bill.

Sewer credit will not be given for other excessive use of water that does not go down the sewer drain, such as watering gardens or lawns; washing vehicles, power washing your building, leaving a hose running, filling pools or hot tubs etc.

This policy shall become effective on the date of approval by the Village Board.

Approval Date: February 6, 2017

WATKINS GLEN FIRE DEPARTMENT
201 N. PERRY STREET
WATKINS GLEN NY, 14891
607-535-7700
CHIEF: JASON HUDSON
firechief@watkinsglen.us

MEMBER APPLICATION FOR USE OF VILLAGE FIRE HALL

Member Name: James Spencer

Address: 3295 Reading Rd, WG, NY 14891

Phone Number: 607-215-2697 Email: SpencerJ275@gmail.com

Type Activity: birthday Party No. of Attendees: 35

Date(s) Requested: Sat. 11/8/25 Time Requested: 10 am-3 pm

Kitchen: Yes or No Catered: Yes or No If so, by who?:

The following items must be included with the application:

A. Signed **Village of Watkins Glen Release and Waiver of Liability** form completed by the member listed above.
B. Acknowledgement from the Fire Department Chief that the Fire Hall is available on the requested date, indicated by their signature below.

The following guidelines must be adhered to:

A. **No Smoking:** Smoking is not allowed in any public building.
B. **No Alcohol:** No alcoholic beverages are allowed on any Village Property, unless express written consent is given by the Board of Trustees.
C. The facility must be clean upon vacating the premises including bathrooms and kitchen. Kitchen (if used) must be left in the order it was found including appliances, sinks and counters. All tables and chairs must be wiped clean, folded and placed on the appropriate racks. All floor areas must be swept and mopped regardless of their condition. A dumpster is provided at the rear of the building.

This application is not approved without all signatures required below and must be accompanied by the items listed above. Failure to abide by this agreement will cause immediate termination of use and subject the member to additional financial liability and restriction from future use. The Village of Watkins Glen Board of Trustees and/or the Watkins Glen Fire Department reserves the right to request minimum insurance requirements from the requesting party at their discretion.

Member's signature indicates they agree to all terms and conditions stated herein.

Member Signature: James Spencer Date: 16/Oct/2025

Fire Chief: Date:

Board of Trustees Approval:

Approved by Date:

Car 19 approves bounce house

RELEASE AND WAIVER OF LIABILITY

The individual named below (referred to as "I" or "me") desires to enter the property owned by THE VILLAGE OF WATKINS GLEN, NEW YORK (the "Owner"), known as the WATKINS GLEN FIRE HALL located at 201 N. Perry Street, Watkins Glen, NY 14891 (the "Property"), for the purpose of daughter's birthday Party (the "Activity"). In consideration of being permitted by the Owner to enter the Property and participate in the Activity, and in recognition of the Owner's reliance hereon, I agree to the following terms and conditions:

1. I AM AWARE AND UNDERSTAND THAT ACCESSING THE PROPERTY AND PARTICIPATING IN THE ACTIVITY MAY INVOLVE THE RISK OF SERIOUS INJURY, DISABILITY, DEATH, AND/OR PROPERTY DAMAGE. I ACKNOWLEDGE THAT ANY INJURIES THAT I SUSTAIN MAY RESULT FROM OR BE COMPOUNDED BY THE ACTIONS, OMISSIONS, OR NEGLIGENCE OF THE OWNER, INCLUDING NEGLIGENT EMERGENCY RESPONSE OR RESCUE OPERATIONS OF THE OWNER. NOTWITHSTANDING THE RISK, I ACKNOWLEDGE THAT I AM VOLUNTARILY ACCESSING THE PROPERTY AND PARTICIPATING IN THE ACTIVITY WITH KNOWLEDGE OF THE DANGER INVOLVED AND HEREBY AGREE TO ACCEPT AND ASSUME ANY AND ALL RISKS OF INJURY, DISABILITY, DEATH, AND/OR PROPERTY DAMAGE ARISING THEREFROM, WHETHER CAUSED BY THE ORDINARY NEGLIGENCE OF THE OWNER OR ANY RELEASEE OR OTHERWISE.

2. I hereby expressly waive and release any and all claims, now or hereafter known, against the Owner, and its officers, manager(s), employees, agents, affiliates, successors, and assigns, including but not limited to the Village of Watkins Glen Fire Department (collectively, "Releasees"), on account of injury, disability, death, or property damage arising out of or attributable to my being on the Property or my participation in the Activity, whether arising out of the ordinary negligence of the Owner or any Releasees or otherwise. I covenant not to make or bring any such claim against the Owner or any other Releasee, and forever release and discharge the Owner and all other Releasees from liability under such claims. This waiver and release does not extend to claims for gross negligence, willful misconduct, or any other liabilities that New York law does not permit to be released by agreement.

3. I shall defend, indemnify, and hold harmless the Owner and all other Releasees against any and all losses, damages, liabilities, deficiencies, claims, actions, judgments, settlements, interest, awards, penalties, fines, costs, or expenses of whatever kind, including reasonable attorney fees, the costs of enforcing any right to indemnification under this Release, and the cost of pursuing any insurance providers, incurred by/awarded against the Owner or any other Releasees in a final [non-appealable judgment arising out of or resulting from any claim of a third party related to my being on the Property or my participation in the Activity, including any claim related to my own negligence or the ordinary negligence of the Owner.

4. I will not initiate any claim, lawsuit, court action, or other legal proceeding or demand against Owner or an Releasee, nor join or assist in the prosecution of any claim for money or other damages which anyone may have, on account of injuries (including death), losses, or

damages sustained by me, other parties, or my (or others') property in connection with my participation in the Activity, and I waive any right I may have to do so. This means that I cannot sue to hold Owner or any Releasee responsible for any injury, loss, or damage sustained by me, other parties, or my (or others') property in connection with the Activity, even if it is due to the ordinary negligence, injudicious act, omission, or other fault of Owner or any Releasee.

5. I agree that I will follow all instructions of any onsite property manager or other representative or agent of the Owner while on the Property.

6. I hereby consent to receive medical treatment deemed necessary if I am injured or require medical attention while on the Property. I understand and agree that I am solely responsible for all costs related to such medical treatment and any related medical transportation and/or evacuation. I hereby release, forever discharge, and hold harmless the Owner from any claim based on such treatment or other medical services.

7. This Release constitutes the sole and entire agreement of the Owner and me with respect to the subject matter contained herein and supersedes all prior and contemporaneous understandings, agreements, representations, and warranties, both written and oral, with respect to such subject matter. If any term or provision of this Release is invalid, illegal, or unenforceable in any jurisdiction, such invalidity, illegality, or unenforceability shall not affect any other term or provision of this Release or invalidate or render unenforceable such term or provision in any other jurisdiction. This Release is binding on and shall inure to the benefit of the Owner and me and our respective successors, assigns, heirs, executors, and personal representatives. All matters arising out of or relating to this Release shall be governed by and construed in accordance with the internal laws of the State of New York without giving effect to any choice or conflict of law provision or rule (whether of the State of New York or any other jurisdiction). Any claim or cause of action arising under this Release may be brought only in the federal and state courts located in Schuyler County, New York, and I hereby consent to the exclusive jurisdiction of such courts.

BY SIGNING, I ACKNOWLEDGE THAT I AM AT LEAST EIGHTEEN (18) YEARS OF AGE; I HAVE READ AND UNDERSTOOD ALL OF THE TERMS OF THIS RELEASE AND THAT I AM VOLUNTARILY GIVING UP SUBSTANTIAL LEGAL RIGHTS, INCLUDING THE RIGHT TO SUE THE OWNER.

James Spencer
Signature

16/oct/2025
Date

James Spencer
Print Name

3295 Reading Rd
Address

Watkins Glen
City

NY
State

14891
Zip

SCHOOL RESOURCE OFFICER AGREEMENT

This School Resource Officer ("SRO") Agreement (this "**Agreement**") is made as of _____, 20__ by and between the County of Schuyler on behalf of the Sheriff's Office, with offices located at 105 Ninth Street, Watkins Glen, New York 14891 (hereinafter referred to as the "**County**"); the Village of Watkins Glen on behalf of Watkins Glen Police Department, with offices locates at 303 N. Franklin Street, Watkins Glen, New York 14891 (hereinafter the "**Village**"), and Watkins Glen Central School District, with offices located 313 12th Street, Watkins Glen, New York 14891 (hereinafter referred to as the "**School District**"), collectively, "the Parties".

WHEREAS, the General Municipal Law of the State of New York, Article 5-G, particularly Section 119-o, provides for cooperative agreements by which municipal governments, including school systems, agree upon mutually acceptable terms and conditions to jointly fulfill their statutory duties and obligations;

WHEREAS, the School District, the Village and County have determined that it is in their mutual best interests to enter into this Agreement to provide for the assignment of one or more law enforcement officers employed by the Village or the County to serve as the Evening School Resource Officer (SRO) at the School District;

NOW, THEREFORE, the parties hereto hereby agree as follows:

1. **General Terms and Conditions**.

    a. The County, the Village and School District enter into this Agreement for the purpose of placing an officer on site at the School District to serve as SRO during the afterschool hours from 3:00 p.m. until the conclusion of school activities or 11:00 p.m., whichever is earlier. From time to time, the School District may request that the County and/or the Village provide a SRO for additional shifts as needed. The County and the Village will assign the SRO to the School District according to a mutually agreeable schedule, in accordance with the terms set forth herein.

    b. The County and the Village agree that services rendered under this Agreement will be in compliance with applicable Federal and State constitutional requirements, local laws, rules, regulations including, but not limited to, the New York State Worker's Compensation Law, New York State Civil Service Law, New York State General Municipal Law, and applicable regulations of the Commissioner of Education.

    c. The Evening SRO shall be subject to all other personnel policies and practices of the entity providing such SRO.

2. **Purpose**. The School District hereby agrees to secure the services of the County and the Village. The County and Village agree to provide the service of an officer to serve in one (1) Evening SRO position designated by agreement of the parties, to be assigned as follows:

The County and the Village agree to have one (1) SRO on site at the designated School District building(s) from 3:00 p.m. until the conclusion of school activities, or 11:00 p.m., whichever is earlier, each day that school is in session during the school year. The SRO shall be granted all legally required breaks (e.g. lunch when legally required). Additional shifts will be approved as needed if possible and upon mutual agreement of the parties.

3. **Term**. The term of this Agreement commences on agreement execution by all parties and expires on June 30, 2026.

   This Agreement may be terminated upon thirty (30) days' written notice to the other parties at each party's designated address. Any extension or renewal of said agreement shall be authorized by the School District Board of Education, and the respective governing bodies of the Village and the County.

4. **Payment**.

   a. **SRO Compensation.** The County and the Village agree to provide and to pay the Evening SRO's salary and employment benefits in accordance with the applicable salary schedules and employment practices of the County and Village, employing such officers.

   b. **County Compensation.** (Add "Village")

      i. Compensation for Services. The School District shall pay to the County and/or the Village a total amount not to exceed $65,000.00 in consideration for the services set forth in this Agreement. The County and the Village will invoice the School District on a monthly basis for services rendered by each of them beginning on September 1, 2025 and ending on June 1, 2026. Copies of said invoices shall be provided to all parties to this Agreement. The County and the Village shall each maintain records of the total amount received by that party from the School District to ensure the amount paid during the contract term does not exceed $65,000.00.

      ii. Invoices. All payments owed by the School District to the County and the Village under the terms of this Agreement shall be made within thirty (30) days following School District's receipt of an invoice from the County and/or the Village.

      (Add iii) $2,000 to cover WCPD Vehicle

5. **School District Duties**. In addition to any responsibilities of the School District set forth in this Agreement, the School District will:

   a. Confirm that the Evening SRO has received all training required under the terms of this Agreement by obtaining a certificate evidencing the training requirement has been satisfied.

b. Train staff annually regarding appropriate role of Evening SRO in schools, and appropriate conditions under which Evening SRO assistance may be requested.

c. Review data collected by the County and/or Village at least once each year pertaining to all school-based searches, seizures, citations, ticketing, arrests, use of force, interrogations, court referrals, disaggregated by location of arrest/school, charge, arresting agency, gender, age, race/ethnicity, disability and ESL status, and use such data to evaluate and revise policies to ensure the Agreement is carried out in a manner consistent with civil rights and anti-discrimination laws.

d. To the extent permitted by law or School District policy, provide designated Evening SRO with an office which includes access to a location for files and records that can be properly locked and secured.

e. Access to other general office equipment such as fax machines, copy machines, etc.

f. The School District acknowledges that the Evening SRO may be required to attend, at the direction of the County and the Village, emergencies, special needs and training functions as deemed necessary by the County and Village.

6. **<u>County and Village Duties</u>**

a. **General Obligations of the County and Village.** The County and the Village will:

i. The Evening SRO schedule will be divided between the County and the Village. The County will provide an Evening SRO on odd-numbered days. The Village will provide an Evening SRO on even-numbered days.

ii. Train the Evening SRO regarding their role in the School District prior to their placement in the School District. Such training should encourage the Evening SRO to exercise discretion to minimize arrests for minor misbehaviors and use all available diversion programs and other alternatives to arrest. Such training may also include topical areas such as child and adolescent development and psychology; age-appropriate responses; cultural competence; restorative justice techniques; special accommodations for students with disabilities; practices proven to improve school climate; and challenges relative to lesbian, gay, bisexual, transgender and questioning students.

iii. Collect data reflecting all school-based searches, seizures, citations, ticketing, arrests, use of force, interrogations, court referrals, and disaggregate the data by location of arrest/school, charge, arresting agency, gender, age, race/ethnicity, disability and ESL status. The County and the

Village shall provide this data to the School District at least once each year during the term of this Agreement.

iv. Cooperate with the School District to implement the Evening SRO Program with the least possible disruption to the educational process.

v. Nothing in this agreement shall deprive the County or Village, or its law enforcement offices, of their governmental and/or police powers and responsibilities imposed or enjoyed under color of law including, but not limited to, those provided for in the Constitution of the United States of American, the New York State Constitution and/or any other applicable federal, state or local law.

vi. The parties acknowledge that the services performed and expenditures made by the County and Village, or their employees, under this agreement shall be considered to be governmental in nature and for public and governmental purposes. Nothing in this agreement shall create a special duty to the school district or to any third party including, but not limited to, the School District's employees and students or to the general public.

b. **Services and Duties of SRO.** The County and the Village shall provide the School District with (an) officer(s) capable of providing the following Evening SRO services:

i. Report directly to the designated supervising officers at the Village and/or the County.
ii. Provide for the security and safety of all students, staff, and visitors, protect school property and maintain order in and around the school site.
iii. Attend Superintendent's hearings with students as requested by the School District.
iv. Provide intervention between students and/or staff using appropriate techniques to calm and control situations.
v. Under the supervision of the Village and the County, and in coordination with the School District's administration, investigate all crimes and incidents occurring on and in the vicinity of school grounds. Provide the appropriate documentation for such investigations.
vi. Report all violations of law, school rules, regulations or policies to School District's administration.
vii. Enforce all governing New York State and federal laws, rules, and regulations and assist schools in meeting requirements mandated by New York State law.
viii. Act as liaison with police and other emergency personnel.
ix. Build relationships by being a liaison between the Village, the County and the School District.

x. Advise the School District's administration of any circumstances or situation that may create any potential harm to persons, or damage to, or loss of property.

xi. When feasible and requested to do so by School District's officials, and in a manner which does not infringe upon individuals' Constitutional rights, screen persons entering the building or school grounds.

xii. Become familiar with all hidden recesses in the building and check them periodically.

xiii. Maintain post integrity. Be highly visible and available at all times and refrain from unnecessary fraternization with other officers/employees of the School District.

xiv. Question any individual not having appropriate identification to ascertain their status.

xv. Develop and maintain a positive and open relationship with students, administrators, faculty, staff, and parents.

xvi. When requested, participate in meetings with school officials, parents or the School Board to assist in dispute resolution and/or in developing policy and procedures concerning school safety. Additionally, provide information to students and staff in regard to DWIs, weapons, sale of illegal drugs, etc.

xvii. Seize and store/dispose of any illegal substance or contraband seized by school officials as required/not required for evidence in prosecution, as might be consistent with applicable state and federal law.

xviii. Educate potential school-age victims in crime prevention and safety.

xix. Develop or expand crime prevention efforts for students.

xx. RESTRAINTS: The Evening SRO shall comply with all applicable laws, regulations, and County/Village policies and procedures, applicable to law enforcement officers, regarding corporal punishment and the use of physical restraints on students.

c. **All Duties.** The Evening SRO shall not enforce school rules or policies, except to the extent such student conduct might independently and separately constitute offenses under the laws of the State of New York. Matters concerning school rules, policies or school discipline other than the student conduct stated above shall be referred to the appropriate building principal. The Evening SRO shall not detain or question students about their immigration status. The Evening SRO shall abide by School District policies except to the extent that such policies conflict with the officer's responsibilities as a law enforcement officer or in a situation where life or property is in danger. All of the obligations of the County and the Village as required under this Agreement shall be met without discriminating on the basis of race, color, sex, national origin, language status, disability, religion, sexual orientation, or membership in any other protected class.

7. **Evening SRO Program Objectives**. The objectives of the Evening SRO program are to:

    a. Provide a police presence at School District events in order to promote and provide an atmosphere of enhanced school safety for faculty, staff, students and school visitors.

    b. Provide a Law Enforcement resource to students, teachers, school administrators and parents, so as to:

        i. Increase student awareness about personal safety, crime prevention, internet safety, conflict resolution, violence prevention, restorative justice, peer mediation, other related topics through formal and informal instructional strategies.

        ii. Increase school faculty and staff awareness about policies and procedures for preventing/responding to incidents of violence and other threats to school safety.

    c. Facilitate crime prevention, Law Enforcement, and security consultation.

    d. Build lines of communication and promote positive attitudes between students and the County, the Village and the School District.

    e. Proactively address problems and pressures as they relate to students before such problems manifest into socially and legally unacceptable behavior. These problems may involve the use of alcohol, drugs, tobacco, illegal and prohibited substances. They may also involve peer pressure and sexual activity.

    f. Provide a positive role model to the students.

    g. Provide education in law enforcement, as requested and appropriate.

8. **Qualifications of the Evening SRO**. All individuals performing Evening SRO services under this Agreement shall be and remain at all times properly licensed and credentialed in accordance with applicable law to perform services in accordance with this Agreement. The Evening SRO shall meet the following qualifications:

    a. Be a law enforcement officer, as defined pursuant to New York State Criminal Procedure Law §1.20(34), who has completed the full New York DCJS academy, with prior law enforcement experience;
    b. Have excellent communication skills;
    c. Be able to relate well to children of all ages; and
    d. Possess good coordinating and planning skills.

9. **Independent Contractor**. The County and the Village shall be providing services to the School District as independent contractors, and any and all services performed by the

Evening SRO under this Agreement shall be performed in such capacity. The Evening SRO shall not hold him/herself out as, nor claim to be, an officer or employee of the School District, nor make any claim, demand, or application to or for any right or privilege applicable to an officer or employee of the School District including, but not limited to, the School District's workers' compensation coverage, unemployment insurance benefits, social security coverage, disability benefits, or retirement membership or credit. The Evening SRO shall not have, or hold themself out as having the authority or power to bind or create liability for the School District by the Evening SRO's acts or omissions. As the Evening SRO's employer, the County and/or Village shall comply with all Federal, State, and local laws rules and regulations. The County and the Village shall pay any applicable taxes, including income taxes, workers' compensation insurance, unemployment insurance payment, disability insurance payment, and/or any other payments that may be required under the laws, rules, or regulations of any government agency having jurisdiction over the County, the Village or their relationship with the School District. The County and the Village further agree to indemnify and hold the School District harmless against any claim, cost, penalty, damage, or expense (including attorneys' fees) related to either parties nonpayment or underpayment of any such taxes or payments. These provisions shall survive any expiration, termination, or non-renewal of this Agreement. An Evening SRO assigned to the School District is under the direct supervision of the command officers of the Village or the County. The School District shall have no ability to control the manner, means, details or methods by which the Evening SRO, the County, the Village or their agents perform services under this Agreement except as provided herein and as required by federal, state, or local laws, rules, and regulations.

10. **Absences and Replacements**.

a. **Absences**. In the event an assigned Evening SRO is to be absent from work, the Evening SRO shall notify their supervising officer at the Village and/or the County. The assigned Evening SRO's employer shall make every effort to cover the position. In the event the assigned Evening SRO's department cannot cover the position, the other department shall be notified and will make every effort to cover the position. In this instance, the party whose scheduled law enforcement officer cannot work a shift, will report their unavailability to his/her supervisor, who will contact the other department regarding a replacement to cover the shift. In the event neither the County nor the Village can cover a shift, they shall promptly notify the Superintendent of Schools that the SRO will be absent. The parties acknowledge and agree that there is no expectation that every shift can or will be covered.

b. **Replacements and Removals**. In the event that the Superintendent of Schools, the Village or the County determine that the work of an Evening SRO is unsatisfactory to either both or all, then in that event the Superintendent, the Village and the County shall meet to seek agreement or corrective action. If the Superintendent of Schools, the Village and the County are unable to agree upon corrective action, then either, upon written notice to the other, may terminate the Evening SRO's assignment at the School District. The Superintendent of Schools, the Village and the County shall thereafter meet to determine if a replacement Evening SRO can be

assigned to the school district together with modification of the terms of employment and supervision if appropriate.

i. Irrespective of the above provisions, the parties must comply with any applicable due process requirements under the New York State Civil Service Law and/or the employing party's applicable collective bargaining agreement prior to termination or reassignment of an Evening SRO.

ii. In the event of the resignation, dismissal or reassignment of the Evening SRO, or in case of long-term absences by the Evening SRO, the County and the Village, with agreement from the Superintendent of Schools, shall provide a temporary replacement for the Evening SRO within thirty (30) days of receiving notice of such absence, dismissal, resignation or reassignment. As soon as practicable, the County, the Village and the School District shall find and assign a suitable, permanent replacement for the School Resource Officer.

11. **Confidentiality**. The parties agree that all information exchanged is considered confidential and will be used only for the purpose outlined in the Agreement, unless otherwise required by law including, but not limited to, Article 6 of the Public Officers Law (FOIL), Article 3 of the Family Court Act, and Article 245 of the Criminal Procedure Law of the State of New York.

12. **Indemnification**. Each party shall indemnify, defend, protect, hold harmless, and release the other, its officers, agents, and employees, from and against any and all claims, loss, proceedings, damages, causes of action, liability, costs, or expense (including attorneys' fees and witness costs) arising from or in connection with, or caused by any act, omission, or negligence of such indemnifying party or its agents, employees, contractors, subcontractors, or invitees. This indemnification obligation shall not be limited in any way by any limitation on the amount or type of damages or compensation payable to or for the indemnifying party under workers' compensation acts, disability benefit acts, or other employee benefit acts. This indemnity provision survives the Agreement.

13. **Insurance**. Each party shall each maintain insurance naming the other as additional insured. Said insurance shall include Excess General Liability and Automobile Liability Insurance with New York Municipal Insurance Reciprocal, at a limit of $5,000,000 in excess of underlying General Liability ($1,000,000/$3,000,000) and Automobile Liability policies with limits of $1,000,000 per occurrence. The School District and its officers, employees, and agents shall be named as Additional Insureds on a direct primary basis under the policy issued for these coverages. The County and the Village shall also maintain such insurance coverages with proofs thereof for the benefit of the other. The County and the Village shall each provide proof of coverage in compliance with New York State Workers' Compensation Law and a copy of the applicable Additional Insured endorsement form evidencing the coverage outlined herein.

14. **Records Retention**. Each party will maintain all records in connection with this Agreement in accordance with the applicable State Records Retention Schedule, and make such records available for audit by the New York State Department of Education and New York State Audit and Control upon request. Upon the any party's request for any such records, the other shall provide copies within a reasonable amount of time, except as might be confidential under New York State or Federal law.

15. **Non-Appropriation**. Should funds become unavailable or should appropriate governing bodies fail to approve sufficient funds for completion of the services or programs set forth in this Agreement, the School District shall have the option to immediately terminate this Agreement upon providing written notice to the other party. In such event, the School District shall be under no further obligation to the County or the Village other than payment for cost actually incurred prior to termination and in no event will the County be responsible for any actual or consequential damages as a result of termination.

16. **Governing Law**. The Agreement shall be construed and interpreted in accordance with the laws of New York State.

17. **Assignment**. This Agreement may not be assigned by any party.

18. **Interpretation**. The language of all parts of this Agreement in all cases shall be construed as a whole, according to its fair meaning, and not strictly for or against any party, regardless of who drafted it.

19. **Waiver**. The failure of any party to insist on the strict performance of any provision of this Agreement or to exercise any right under this Agreement shall not constitute a waiver of such provisions or right. A waiver is effective only if in writing and signed and delivered by the waiving party.

20. **Applicability**. It is understood and agreed that the entire agreement of the parties is contained herein and that this Agreement supersedes all oral agreements and negotiations between the parties relating to the subject matter thereof. Any alterations, amendments, deletions, or waivers of the provisions in this Agreement shall be valid only when expressed in writing and duly signed by the parties.

21. **New York Education Law Section 2-d Addenda:** The following addenda attached hereto shall be incorporated into the Agreement, and shall supersede any inconsistent provisions in the Agreement:

    - Addendum A: Parents' Bill of Rights for Data Privacy and Security with Supplemental Information Addendum
    - Addendum B: County's Data Security and Privacy Plan
    - Addendum C: Village's Data Security and Privacy Plan

IN WITNESS WHEREOF, the parties hereto have hereunto set their hands and seals the day and year first above written.

COUNTY OF SCHUYLER
on behalf of SCHUYLER COUNTY
SHERIFF'S OFFICE

_____
Signature

Name: CARL H. BLOWERS

Title: Chair of the Legislature

WATKINS GLEN
CENTRAL SCHOOL DISTRICT

_____
Signature

Name: _____

Title: _____

VILLAGE OF WATKINS GLEN
on behalf of WATKINS GLEN POLICE DEPARTMENT

_____
Signature

Name: _____

Title: _____

Addendum A

DISTRICT'S PARENTS' BILL OF RIGHTS
WITH SUPPLEMENTAL INFORMATION ADDENDUM

Watkins Glen Central School District

Community Agency Data Privacy Agreement

PARENTS' BILL OF RIGHTS FOR DATA PRIVACY AND SECURITY

The District, in compliance with Education Law §2-d, provides the following:

DEFINITIONS:

As used in this policy, the following terms are defined:

Student Data means personally identifiable information from the student records of a District student.

Teacher or Principal Data means personally identifiable information from District records relating to the annual professional performance reviews of classroom teachers or Principals that is confidential and not subject to release under the provisions of Education Law §§3012-c and 3012-d.

Third-Party Contractor means any person or entity, other than a District, that receives student data or teacher or Principal data from the District pursuant to a contract or other written agreement for purposes of providing services to the District, including, but not limited to, data management or storage services, conducting studies for or on behalf of the District, or audit or evaluation of publicly funded programs. Such term shall include an educational partnership organization that receives student or teacher or Principal data from a school district to carry out its responsibilities pursuant to Education Law §211-e and is not a District, and a not-for-profit corporation or other nonprofit organization, other than a District.

1. Neither student data, nor teacher or Principal data will be sold or released for any commercial purpose;

2. Parents have the right to inspect and review the complete contents of their child's education records. Procedures for reviewing student records can be found in the Board Policy entitled 1.26 BYLAW PERTAINING TO STUDENT RECORDS;

3. Security protocols regarding confidentiality of personally identifiable information are currently in place and the safeguards necessary to protect the confidentiality of student data are maintained at industry standards and best practices. The safeguards include, but are not limited to, encryption, firewalls, and password protection. As required by Education Law §2-d (5), the National Institute for Standards and Technology Framework for Improving Critical Infrastructure Cybersecurity Version 1.1 (NIST Cybersecurity Framework or NIST CSF) is adopted as the standard for data security and privacy;

4. New York State maintains a complete list of all student data collected by the State and the data is available for public review at http://www.p12.nysed.gov/irs/sirs/NYSEDDataElements2018.xlsx, or by writing to the Office of Information & Reporting Services, New York State Education Department, Room 863 EBA, 89 Washington Avenue, Albany, New York 12234;

5. Parents have the right to have complaints about possible breaches of student data addressed. Complaints should be directed to Greg Kelahan, Superintendent of Watkins Glen Central School District.

6. The District will promptly acknowledge receipt of complaints, commence an investigation, and take the necessary precautions to protect personally identifiable information;

   - Following its investigation of a submitted complaint, the District shall provide the parent or eligible student with its findings within a reasonable period but no more than 60 calendar days from receipt of the complaint;

   - Where the District requires additional time, or where the response may compromise security or impede a law enforcement investigation, the District shall provide the parent or eligible student with a written explanation that includes the approximate date when the District anticipates that it will respond to the complaint;

   - The District will require complaints to be submitted in writing;

   - The District will maintain a record of all complaints of breaches or unauthorized releases of student data and their disposition in accordance with applicable data retention policies, including the Records Retention and Disposition Schedule ED-1;

7. This policy will be regularly updated with supplemental information for each contract the District enters into with a third-party contractor where the third-party contractor receives student data or teacher or Principal data. The supplemental information must be developed by the District and include the following information:

   - the exclusive purposes for which the student data or teacher or Principal data will be used by the third-party contractor, as defined in the contract;

- how the third-party contractor will ensure that the subcontractors, or other authorized persons or entities to whom the third-party contractor will disclose the student data or teacher or Principal data, if any, will abide by all applicable data protection and security requirements, including, but not limited to, those outlined in applicable State and federal laws and regulations (e.g., FERPA; Education Law §2-d);

- the duration of the contract, including the contract's expiration date and a description of what will happen to the student data or teacher or Principal data upon expiration of the contract or other written agreement (e.g., whether, when and in what format it will be returned to the District, and whether, when and how the data will be destroyed);

- if and how a parent, student, eligible student, teacher or Principal may challenge the accuracy of the student data or teacher or Principal data that is collected;

- where the student data or teacher or Principal data will be stored, it will be described in such a manner as to protect data security and the security protections taken to ensure that such data will be protected and data security and privacy risks mitigated; and how the data will be protected using encryption while in motion and at rest will be addressed.

8. This policy shall be published on the District's website. This policy shall also be included with every contract the District enters with a third party contractor where the third party contractor receives student data or teacher or Principal data.

Data Security and Privacy Policy

Definitions:

1. Protected Data means personally identifiable data of students from student education records as defined by FERPA, as well as teacher and Principal data regarding annual professional performance reviews made confidential under New York Education Law §3012-c and §3012-d.

Requirements:

1. Publication: This policy shall be published on the District's website and notice of the policy provided to all officers and employees of the District.
2. The District shall provide the data protection as well as the protection of parent and eligible student's rights and rights to challenge the accuracy of such data required by FERPA (20 USC §1232g), IDEA (20 USC §1400 et. seq.) and any implementing regulations.
3. The District hereby adopts the National Institute for Standards and Technology (NIST) Cybersecurity Framework (CSF) in accordance with the Commissioner's Regulations.
4. Every contract or other written agreement with a third party contractor under which the third party contractor will receive protected student data or teacher or Principal data shall include a data security and privacy plan that outlines how all State, federal, and local data security and privacy contract requirements will be implemented over the life of the contract, consistent with this policy.
5. Nothing contained in this policy or the District's Data Security and Privacy Plan shall be construed as creating a private right of action against the District.
6. Every use and disclosure of personally identifiable information, as defined by FERPA, shall be for the benefit of students and the educational agency. Examples of such benefit are provided in implementing regulations.
7. The District shall not sell or disclose for marketing or commercial purposes any Protected Data, or facilitate its use of disclosure by any other party for any marketing or commercial purpose, or permit another party to do so.
8. The District shall take steps to minimize its collection, process and transmission of Protected Data.
9. Except as required by law or in the case of enrollment data, the District shall not report to NYSED Juvenile Delinquency records, criminal records, medical health records, or student biometric information.
10. All contracts with agencies that have access to Protected Data shall comply with NIST Cybersecurity Framework.

Supplemental Information

Supplemental Contract Information

SUPPLEMENTAL INFORMATION ELEMENT	2-D 121		SUPPLEMENTAL INFORMATION
The exclusive purpose(s) for which the student data or teacher or principal data will be used by the third- party contractor, as defined in the contract	3(c)	3(c)	
How the contractor will ensure that any other entities with which it shares the protected data, if any, will comply with the data protection and security provisions of law, regulation and this contract	3(c)	3(c)	
When the agreement expires and what happens to the protected data when the agreement expires	3(c)	3(c)	
If a parent, student, or eligible student may challenge the accuracy of the protected data that is collected; if they can challenge the accuracy of the data, describe how	3(c)	3(c)	
Where the protected data will be stored (described in a way that protects data security), and the security protections taken to ensure such data will be protected and data security and privacy risks mitigated	3(c)	3(c)	
How the data will be protected using encryption.	3(c)	3(c)	

All agencies must sign below to verify that the above has been read and that the terms and conditions of these documents will be adhered to. If the page is not signed, school business will not be conducted with the agency. If this page is signed and it is determined that the agency was unable to provide as specified, agency may be deemed non-responsive. The contract is good one year from the date of signature.

Community Agency Name: _____

Agency Representative Name (Print): _____

Signature: _____

Date: _____

Addendum B

DATA SECURITY AND PRIVACY PLAN

WHEREAS, the Watkins Glen Central School District (hereinafter "School District"), and the County of Schuyler on behalf of the Schuyler County Sheriff's Office (hereinafter "the County") have entered into an agreement, and

WHEREAS, pursuant to the requirements under 8 NYCRR 121, the County maintains the data security and privacy plan described herein in connection with the Services provided to the School District.

1. The County shall comply with 8 NYCRR 121 in that it acknowledges that it has reviewed the School District's Parents Bill of Rights for Data Privacy and Security and will comply with same.

   a. The County will use the student data or teacher or principal data only for the exclusive purposes defined in the Agreement.

   b. The County will ensure that the subcontractor(s) or other authorized persons or entities to whom the County will disclose the student data or teacher and principal data, if any, will abide by all applicable data protection and security requirements as described in the "Supplemental Information" appended to the Agreement.

   c. At the end of the term of the Agreement, the County will destroy, transition or return, at the direction of the School District, all student data and all teacher and principal data in accordance with the "Supplemental Information" appended to the Agreement.

   d. Student data and teacher and principal data will be stored in accordance with the "Supplemental Information" appended to the Agreement.

   e. Student data and teacher and principal data in motion and at rest will be protected using an encryption method that meets the standards described in 8 NYCRR 121.

2. Prior to receiving access to student data and/or teacher and principal data, officer(s) and employee(s) of the County and any assignees who will have access to student data or teacher or principal data shall receive training on the federal and state laws governing confidentiality of such data.

3. The County has the following procedures, plans or protocols in place to manage data security and privacy incidents that implicate personally identifiable information:

HIPAA Compliance

In accordance with current federal regulations (HIPAA), it is Schuyler County IT's practice to make sure that no client protected information is electronically stored in a location where it can be read or accessed by non-authorized users who may have physical access to workstations. If the client' information is stored in a workstation's local hard drive, individual profiles will be maintained in the workstation so that only authorized staff using the workstation will have access to the information.

4. Termination of Agreement.

Within one (1) year of termination or expiration of the agreement without renewal, the County shall delete all personally identifiable information.

5. In the event of a conflict between the terms of this Data Security and Privacy Plan and the terms of the Agreement, the terms of this Data Security and Privacy Plan shall control. All of the defined terms in the Agreement shall have the same definitions in the Data Security and Privacy Plan, unless otherwise defined herein. Except as expressly set forth in this Data Security and Privacy Plan, the terms and conditions of the Agreement shall remain unmodified and in full force and effect.

IN WITNESS WHEREOF, the County hereto agrees to all duties and obligations under Addendum A.

Signature

_____

CARL H. BLOWERS
Chair of the Schuyler County Legislature

_____

Date

Addendum C

DATA SECURITY AND PRIVACY PLAN

WHEREAS, the Watkins Glen Central School District (hereinafter "School District"), and the Watkins Glen Police Department (hereinafter "the Village") have entered into an agreement, and

WHEREAS, pursuant to the requirements under 8 NYCRR 121, the Village maintains the data security and privacy plan described herein in connection with the Services provided to the School District.

1. The Village shall comply with 8 NYCRR 121 in that it acknowledges that it has reviewed the School District's Parents Bill of Rights for Data Privacy and Security and will comply with same.

   a. The Village will use the student data or teacher or principal data only for the exclusive purposes defined in the Agreement.

   b. The Village will ensure that the subcontractor(s) or other authorized persons or entities to whom the Village will disclose the student data or teacher and principal data, if any, will abide by all applicable data protection and security requirements as described in the "Supplemental Information" appended to the Agreement.

   c. At the end of the term of the Agreement, the Village will destroy, transition or return, at the direction of the School District, all student data and all teacher and principal data in accordance with the "Supplemental Information" appended to the Agreement.

   d. Student data and teacher and principal data will be stored in accordance with the "Supplemental Information" appended to the Agreement.

   e. Student data and teacher and principal data in motion and at rest will be protected using an encryption method that meets the standards described in 8 NYCRR 121.

2. Prior to receiving access to student data and/or teacher and principal data, officer(s) and employee(s) of the Village and any assignees who will have access to student data or teacher or principal data shall receive training on the federal and state laws governing confidentiality of such data.

3. The Village has the following procedures, plans or protocols in place to manage data security and privacy incidents that implicate personally identifiable information:

[VILLAGE TO FILL IN]

4. Termination of Agreement.

Within [Insert Here] days of termination or expiration of the agreement without renewal, the County shall delete all personally identifiable information.

5. In the event of a conflict between the terms of this Data Security and Privacy Plan and the terms of the Agreement, the terms of this Data Security and Privacy Plan shall control. All of the defined terms in the Agreement shall have the same definitions in the Data Security and Privacy Plan, unless otherwise defined herein. Except as expressly set forth in this Data Security and Privacy Plan, the terms and conditions of the Agreement shall remain unmodified and in full force and effect.

IN WITNESS WHEREOF, the Village hereto agrees to all duties and obligations under Addendum A.

Signature

_____

Title

_____

Date

_____

Voucher Abstract

Village of Watkins Glen

VC 00036592 refund - depoist EC 10/11/25 AMANDABOUG Amanda Boughan
10/17/2025 24,492 10 2025 250.00

LINE	DETAIL DESCRIPTION	AMOUNT	ACCOUNT NO	ACCOUNT DESCRIPTION
001	refund - depoist EC 10/11/25	250.00	AA.0615.000	Customer Deposits

TOTAL VOUCHERS FOR VENDOR: AMANDABOUG # OF VOUCHERS: 1 TOTAL AMOUNT: 250.00

VC 00036485 Pine Sol/Face Sheilds/Aprons/Cleaner/ShopVac 0000AMAZON Amazon Capital Services
10/10/2025 24,492 10 2025 159.38

LINE	DETAIL DESCRIPTION	AMOUNT	ACCOUNT NO	ACCOUNT DESCRIPTION
001	Cleaners/Shields/Aprons/ShopVac	159.38	FF.8320.420	Source/Supply - Repairs & Maint

VC 00036486 Dual Monitor Stand/Monitor Mount 0000AMAZON Amazon Capital Services
10/10/2025 24,492 10 2025 178.60

LINE	DETAIL DESCRIPTION	AMOUNT	ACCOUNT NO	ACCOUNT DESCRIPTION
001	Dual Monitor Stands-2 ea	108.62	AA.3120.430	Police - Materials & Supplies
002	HD Monitor Mount	69.98	AA.3120.430	Police - Materials & Supplies

VC 00036502 caster wheels, water filters, mini fridge 0000AMAZON Amazon Capital Services
10/16/2025 24,492 10 2025 271.13

LINE	DETAIL DESCRIPTION	AMOUNT	ACCOUNT NO	ACCOUNT DESCRIPTION
001	caster wheels - 4 sets	63.16	AA.7140.420	CC/EC - Repairs & Maintenance
002	water filters	18.99	AA.7180.420	Campground - Repairs & Maintenance
003	mini fridge	188.98	AA.7180.420	Campground - Repairs & Maintenance

VC 00036503 LED Christmas bulbs -PO #1609 0000AMAZON Amazon Capital Services
10/16/2025 24,492 10 2025 1,449.00

LINE	DETAIL DESCRIPTION	AMOUNT	ACCOUNT NO	ACCOUNT DESCRIPTION
001	LED Christmas bulbs -PO #1609	1,449.00	EE.0787.000	Repairs & Maintenance Supplies

TOTAL VOUCHERS FOR VENDOR: 0000AMAZON # OF VOUCHERS: 4 TOTAL AMOUNT: 2,058.11

Voucher Abstract

Village of Watkins Glen

VC 00036487 Booster Cables 0AUTOPARTS Auto Parts of Watkins Glen
10/10/2025 24,492 10 2025 41.01

LINE	DETAIL DESCRIPTION	AMOUNT	ACCOUNT NO	ACCOUNT DESCRIPTION
001	Booster Cables	41.01	FF.8320.432	Source/Supply - Tools

VC 00036488 AntiFreeze 0AUTOPARTS Auto Parts of Watkins Glen
10/10/2025 24,492 10 2025 156.00

LINE	DETAIL DESCRIPTION	AMOUNT	ACCOUNT NO	ACCOUNT DESCRIPTION
001	AntiFreeze	30.00	AA.7120.430	Buildings & Grounds - Materials & Supplies
002	AntiFreeze	126.00	AA.7120.430	Buildings & Grounds - Materials & Supplies

VC 00036489 Oil Pump and Filters-Pump & Plow Truck 0AUTOPARTS Auto Parts of Watkins Glen
10/10/2025 24,492 10 2025 149.39

LINE	DETAIL DESCRIPTION	AMOUNT	ACCOUNT NO	ACCOUNT DESCRIPTION
001	Oil and Filters for Pump/Plow Truck	149.39	JT.8130.432	Treatment - Lubrication

VC 00036505 belts for tamp & return of belt 0AUTOPARTS Auto Parts of Watkins Glen
10/16/2025 24,492 10 2025 17.73

LINE	DETAIL DESCRIPTION	AMOUNT	ACCOUNT NO	ACCOUNT DESCRIPTION
001	belts for tamp	35.24	AA.5110.430	Streets - Materials & Supplies
002	return of belt	-17.51	AA.5110.430	Streets - Materials & Supplies

VC 00036506 spray 0AUTOPARTS Auto Parts of Watkins Glen
10/16/2025 24,492 10 2025 17.96

LINE	DETAIL DESCRIPTION	AMOUNT	ACCOUNT NO	ACCOUNT DESCRIPTION
001	spray	17.96	AA.7120.420	Buildings & Grounds - Repairs & Maintenance

VC 00036507 oil changes of the fleet 0AUTOPARTS Auto Parts of Watkins Glen
10/16/2025 24,492 10 2025 303.90

LINE	DETAIL DESCRIPTION	AMOUNT	ACCOUNT NO	ACCOUNT DESCRIPTION
001	oil changes of the fleet	303.90	AA.5110.200	Streets - Equipment Repairs

VC 00036581 Starter Fluid 0AUTOPARTS Auto Parts of Watkins Glen
10/17/2025 24,492 10 2025 6.35

LINE	DETAIL DESCRIPTION	AMOUNT	ACCOUNT NO	ACCOUNT DESCRIPTION
001	Starter Fluid	6.35	AA.7120.430	Buildings & Grounds - Materials & Supplies

VC 00036594 shop supply 0AUTOPARTS Auto Parts of Watkins Glen
10/17/2025 24,492 10 2025 53.21

LINE	DETAIL DESCRIPTION	AMOUNT	ACCOUNT NO	ACCOUNT DESCRIPTION

Voucher Abstract

Village of Watkins Glen

001	shop supply	53.21	AA.7120.430	Buildings & Grounds - Materials & Supplies

TOTAL VOUCHERS FOR VENDOR: 0AUTOPARTS # OF VOUCHERS: 8 TOTAL AMOUNT: 745.55

VC 00036491 Rodent Control-Campground 0BAKERSEXT Baker's Exterminating LLC
10/10/2025 24,492 10 2025 75.00

LINE	DETAIL DESCRIPTION	AMOUNT	ACCOUNT NO	ACCOUNT DESCRIPTION
001	Rodent Control-Campground	75.00	AA.7180.400	Campground - Contractual Expenses

TOTAL VOUCHERS FOR VENDOR: 0BAKERSEXT # OF VOUCHERS: 1 TOTAL AMOUNT: 75.00

VC 00036492 Air Compressor BDP INDUST BDP Industries
10/10/2025 24,492 10 2025 923.90

LINE	DETAIL DESCRIPTION	AMOUNT	ACCOUNT NO	ACCOUNT DESCRIPTION
001	Air Compressor	923.90	JT.8130.426	Treatment - Solids Disposal Exp

TOTAL VOUCHERS FOR VENDOR: BDP INDUST # OF VOUCHERS: 1 TOTAL AMOUNT: 923.90

VC 00036508 estimated fee 01/01/25 - 12/31/25 - music use fee 0000000BMI BMI General Licensing
10/16/2025 24,492 10 2025 414.75

LINE	DETAIL DESCRIPTION	AMOUNT	ACCOUNT NO	ACCOUNT DESCRIPTION
001	estimated fee 01/01/25 - 12/31/25 - music use fee	414.75	AA.7140.400	CC/EC - Contractual Expense

TOTAL VOUCHERS FOR VENDOR: 0000000BMI # OF VOUCHERS: 1 TOTAL AMOUNT: 414.75

Voucher Abstract

Village of Watkins Glen

VC 00036493 Sludge Removal 0CASELLA 2 Casella Organics
10/10/2025 24,492 10 2025 7,787.00

LINE	DETAIL DESCRIPTION	AMOUNT	ACCOUNT NO	ACCOUNT DESCRIPTION
001	Sludge Removal	7,787.00	JT.8130.426	Treatment - Solids Disposal Exp

TOTAL VOUCHERS FOR VENDOR: 0CASELLA 2 # OF VOUCHERS: 1 TOTAL AMOUNT: 7,787.00

VC 00036599 Refund-Overpayment on Closed Accounts 000CJENSEN Christine Jensen
10/20/2025 24,492 10 2025 391.12

LINE	DETAIL DESCRIPTION	AMOUNT	ACCOUNT NO	ACCOUNT DESCRIPTION
001	Overpayment on Closed Accounts	141.83	EE.0125.100	Accounts Receivable - General
002	Overpayment on Closed Accounts	70.50	GG.0360.000	SEWER RENTS RECEIVABLE
003	Overpayment on Closed Accounts	174.50	FF.0350.000	WATER RENTS RECEIVABLE
004	Overpayment on Closed Accounts	4.29	AA.1230.000	Treasurer Fees

TOTAL VOUCHERS FOR VENDOR: 000CJENSEN # OF VOUCHERS: 1 TOTAL AMOUNT: 391.12

VC 00036582 Gov Site-SAAS - September 2025 0000DSDWEB DSD Web Works, Inc
10/17/2025 24,492 10 2025 365.00

LINE	DETAIL DESCRIPTION	AMOUNT	ACCOUNT NO	ACCOUNT DESCRIPTION
001	Website Hosting/Maintenance Fees	215.00	AA.1620.400	Municipal Bldg - Contractual Exp
002	Website Hosting/Maintenance Fees	50.00	FF.8310.400	Water - Contractual
003	Website Hosting/Maintenance Fees	50.00	GG.8110.400	Sewer - Contractual Exp
004	Website Hosting/Maintenance Fees	50.00	EE.0781.500	Contractual Expenses

TOTAL VOUCHERS FOR VENDOR: 0000DSDWEB # OF VOUCHERS: 1 TOTAL AMOUNT: 365.00

VC 00036495 Urethane, Bands, Clips, Mud Plugs 0000EJPRES EJ Prescott Inc
10/10/2025 24,492 10 2025 544.00

LINE	DETAIL DESCRIPTION	AMOUNT	ACCOUNT NO	ACCOUNT DESCRIPTION

001	Urethane w/Aluminum Jacket, Bands, Clips	515.00	FF.8340.430	Transmission - Materials & Supplies Exp
002	4x4 Mud Plugs	29.00	FF.8340.430	Transmission - Materials & Supplies Exp

TOTAL VOUCHERS FOR VENDOR: 0000EJPRES # OF VOUCHERS: 1 TOTAL AMOUNT: 544.00

VC 00036496 Internet Service EMPIREACCE Empire Access
10/10/2025 24,492 10 2025 1,521.98

LINE	DETAIL DESCRIPTION	AMOUNT	ACCOUNT NO	ACCOUNT DESCRIPTION
001	Community Center	100.00	AA.7140.410	CC/EC - Utilities Expense
002	Campground	426.67	AA.7180.410	Campground - Utilities - Phone
003	Water Plant	126.12	FF.8320.410	Source/Supply - Utilities - Internet
004	Municipal building	80.00	AA.1620.410	Municipal Bldg - Utilities Exp
005	Fire Dept	209.19	AA.3410.410	Fire - Utilities Expense
006	Pump Station	280.00	JT.8130.412	Treatment - Internet Exp
007	SCADA	60.00	FF.8320.410	Source/Supply - Utilities - Internet
008	Padua Tank	60.00	FF.8320.410	Source/Supply - Utilities - Internet
009	Seneca Lake Event Center	180.00	AA.7140.410	CC/EC - Utilities Expense

TOTAL VOUCHERS FOR VENDOR: EMPIREACCE # OF VOUCHERS: 1 TOTAL AMOUNT: 1,521.98

VC 00036497 DOT Random Test-D.Hughey CCF: 2646484 0ENERGETIX Energetix
10/10/2025 24,492 10 2025 77.50

LINE	DETAIL DESCRIPTION	AMOUNT	ACCOUNT NO	ACCOUNT DESCRIPTION
001	DOT Random Test CCF 2646484 D.Hughey	77.50	EE.0781.500	Contractual Expenses

TOTAL VOUCHERS FOR VENDOR: 0ENERGETIX # OF VOUCHERS: 1 TOTAL AMOUNT: 77.50

VC 00036579 Lease and Maintenance Charges ENTERPRISE Enterprise FM Trust X
10/17/2025 24,492 10 2025 5,104.89

LINE	DETAIL DESCRIPTION	AMOUNT	ACCOUNT NO	ACCOUNT DESCRIPTION
001	Fire Dept Lease & Maint Fee	724.59	AA.3410.200	Fire - Equipment (Vehicles)

002	Streets Dept Lease	3,875.74	AA.5010.200	Streets - Equipment (Lease)
003	Electric Dept Lease	504.56	EE.0261.840	Transportation Equipment

TOTAL VOUCHERS FOR VENDOR: ENTERPRISE # OF VOUCHERS: 1 TOTAL AMOUNT: 5,104.89

VC 00036498 Pants/Hoodies-C.Buckley 000FAMOUSB Famous Brands Outlet
10/10/2025 24,492 10 2025 410.11

LINE	DETAIL DESCRIPTION	AMOUNT	ACCOUNT NO	ACCOUNT DESCRIPTION
001	Pants/Hoodies-C.Buckley	410.11	JT.8110.430	Sewer Admin - Clothing & Safety

VC 00036509 jacket - Rainy Hasby 000FAMOUSB Famous Brands Outlet
10/16/2025 24,492 10 2025 76.00

LINE	DETAIL DESCRIPTION	AMOUNT	ACCOUNT NO	ACCOUNT DESCRIPTION
001	jacket - Rainy Hasby	76.00	AA.3120.423	Police - Clothing & Safety Supplies

TOTAL VOUCHERS FOR VENDOR: 000FAMOUSB # OF VOUCHERS: 2 TOTAL AMOUNT: 486.11

VC 00036499 Planning Board 10/22/25 000FLMEDIA Finger Lakes Media
10/10/2025 24,492 10 2025 37.67

LINE	DETAIL DESCRIPTION	AMOUNT	ACCOUNT NO	ACCOUNT DESCRIPTION
001	Planning Board 10/22/25	37.67	AA.8020.400	Planning - Contractual Exp

TOTAL VOUCHERS FOR VENDOR: 000FLMEDIA # OF VOUCHERS: 1 TOTAL AMOUNT: 37.67

VC 00036500 Exhaust Fan Parts 00GRAINGER Grainger, Inc
10/10/2025 24,492 10 2025 398.51

LINE	DETAIL DESCRIPTION	AMOUNT	ACCOUNT NO	ACCOUNT DESCRIPTION
001	Exhaust Fan Parts	398.51	AA.7120.420	Buildings & Grounds - Repairs & Maintenance

Voucher Abstract

Village of Watkins Glen

VC 00036584 Indicator Light for Substation 00GRAINGER Grainger, Inc
10/17/2025 24,492 10 2025 228.30

LINE	DETAIL DESCRIPTION	AMOUNT	ACCOUNT NO	ACCOUNT DESCRIPTION
001	Indicator Light for Substation	228.30	EE.0741.220	Utilities - All

TOTAL VOUCHERS FOR VENDOR: 00GRAINGER # OF VOUCHERS: 2 TOTAL AMOUNT: 626.81

VC 00036501 Trash/Recycling 0GREENLEAF Greenleaf Recycling
10/10/2025 24,492 10 2025 1,417.75

LINE	DETAIL DESCRIPTION	AMOUNT	ACCOUNT NO	ACCOUNT DESCRIPTION
001	Event Center Trash	200.00	AA.7140.400	CC/EC - Contractual Expense
002	Boat Launch Trash	108.15	AA.7180.400	Campground - Contractual Expenses
003	Waste Water Plant Trash	206.00	JT.8130.410	Treatment - Garbage Removal
004	Park Office Trash	183.60	AA.7140.400	CC/EC - Contractual Expense
005	Campground Trash	210.00	AA.7180.400	Campground - Contractual Expenses
006	Parks Trash	280.00	AA.7110.400	Parks - Contractual Expenses
007	Streets Trash	70.00	AA.8160.400	Streets - Refuse & Garbage
008	Water Plant Trash	70.00	FF.8310.400	Water - Contractual
009	Electrical Office Trash	70.00	EE.0781.500	Contractual Expenses
010	Municipal Building Recycling	20.00	AA.1620.400	Municipal Bldg - Contractual Exp

VC 00036510 WGFD Garbage 0GREENLEAF Greenleaf Recycling
10/16/2025 24,492 10 2025 68.00

LINE	DETAIL DESCRIPTION	AMOUNT	ACCOUNT NO	ACCOUNT DESCRIPTION
001	WGFD Garbage	68.00	AA.3410.410	Fire - Utilities Expense

TOTAL VOUCHERS FOR VENDOR: 0GREENLEAF # OF VOUCHERS: 2 TOTAL AMOUNT: 1,485.75

VC 00036511 Forms- 1099's +envelopes + W2 + NEC 0000HARRIS Harris
10/16/2025 24,492 10 2025 489.50

LINE	DETAIL DESCRIPTION	AMOUNT	ACCOUNT NO	ACCOUNT DESCRIPTION
001	Forms- 1099's +envelopes + W2 + NEC	163.17	EE.0781.500	Contractual Expenses
002	Forms- 1099's +envelopes + W2 + NEC	163.17	FF.8310.425	Water - Office Supplies
003	Forms- 1099's +envelopes + W2 + NEC	163.16	GG.8110.425	Sewer - Office Supplies

TOTAL VOUCHERS FOR VENDOR: 0000HARRIS # OF VOUCHERS: 1 TOTAL AMOUNT: 489.50

VC 00036512 FD & Court - base rate & overage - September 2025 HIGHERINFO Higher Information Group LLC
10/16/2025 24,492 10 2025 47.54

LINE	DETAIL DESCRIPTION	AMOUNT	ACCOUNT NO	ACCOUNT DESCRIPTION
001	contract overages sn MAE499526	23.47	AA.1110.420	Court - Supplies & Maintenance
002	contract base rate charges & overage sn 4HX541531	24.07	AA.3410.400	Fire - Contractual Exp

TOTAL VOUCHERS FOR VENDOR: HIGHERINFO # OF VOUCHERS: 1 TOTAL AMOUNT: 47.54

VC 00036513 4,121,610 kwhs for August 2025 000000IEEP Independent Energy Efficiency Program, Inc
10/16/2025 24,492 10 2025 8,243.22

LINE	DETAIL DESCRIPTION	AMOUNT	ACCOUNT NO	ACCOUNT DESCRIPTION
001	4,121,610 kwhs for August 2025	8,243.22	EE.0782.000	IEEP Services

TOTAL VOUCHERS FOR VENDOR: 000000IEEP # OF VOUCHERS: 1 TOTAL AMOUNT: 8,243.22

VC 00036514 battery- south generator for Dix 00INTERBAT Interstate Battery of TwinTiers
10/16/2025 24,492 10 2025 343.72

LINE	DETAIL DESCRIPTION	AMOUNT	ACCOUNT NO	ACCOUNT DESCRIPTION
001	battery- south generator for Dix	343.72	FF.8340.104	Transmission - Dix - System Maint Supplies

VC 00036515 battery 00INTERBAT Interstate Battery of TwinTiers
10/16/2025 24,492 10 2025 172.76

LINE	DETAIL DESCRIPTION	AMOUNT	ACCOUNT NO	ACCOUNT DESCRIPTION
001	battery	172.76	FF.8320.420	Source/Supply - Repairs & Maint

Voucher Abstract

Village of Watkins Glen

TOTAL VOUCHERS FOR VENDOR: 00INTERBAT # OF VOUCHERS: 2 TOTAL AMOUNT: 516.48

VC 00036589 refund - deposit CC 10/11/25 JASONVANHO Jason VanHorn
10/17/2025 24,492 10 2025 250.00

LINE	DETAIL DESCRIPTION	AMOUNT	ACCOUNT NO	ACCOUNT DESCRIPTION
001	refund - deposit CC 10/11/25	250.00	AA.0615.000	Customer Deposits

TOTAL VOUCHERS FOR VENDOR: JASONVANHO # OF VOUCHERS: 1 TOTAL AMOUNT: 250.00

VC 00036516 catch basin (municpal parking lot) 000JOHNNYS Johnny's Wholesale Inc
10/16/2025 24,492 10 2025 678.00

LINE	DETAIL DESCRIPTION	AMOUNT	ACCOUNT NO	ACCOUNT DESCRIPTION
001	catch basin (municpal parking lot)	678.00	AA.8140.400	Storm Sewers - Contractual Exp

VC 00036517 riser 000JOHNNYS Johnny's Wholesale Inc
10/16/2025 24,492 10 2025 124.00

LINE	DETAIL DESCRIPTION	AMOUNT	ACCOUNT NO	ACCOUNT DESCRIPTION
001	riser	124.00	AA.8140.400	Storm Sewers - Contractual Exp

TOTAL VOUCHERS FOR VENDOR: 000JOHNNYS # OF VOUCHERS: 2 TOTAL AMOUNT: 802.00

VC 00036518 Friday Roller Skate Phot Booth 11/7/25 KAMIWARDEL Kami Wardell
10/16/2025 24,492 10 2025 175.00

LINE	DETAIL DESCRIPTION	AMOUNT	ACCOUNT NO	ACCOUNT DESCRIPTION
001	Friday Roller Skate Phot Booth 11/7/25	175.00	AA.7140.400	CC/EC - Contractual Expense

Voucher Abstract

Village of Watkins Glen

TOTAL VOUCHERS FOR VENDOR: KAMIWARDEL # OF VOUCHERS: 1 TOTAL AMOUNT: 175.00

VC 00036490 Nuts/Bolts/Washers/Terminals/Grease/Towels 000KIMBALL Kimball Midwest
10/10/2025 24,492 10 2025 660.43

LINE	DETAIL DESCRIPTION	AMOUNT	ACCOUNT NO	ACCOUNT DESCRIPTION
001	Nuts/Bolts/Washers/Terminals/Grease/Towels	660.43	AA.5110.430	Streets - Materials & Supplies

TOTAL VOUCHERS FOR VENDOR: 000KIMBALL # OF VOUCHERS: 1 TOTAL AMOUNT: 660.43

VC 00036519 window cleaning exterior - Village Office 00KRISTOPH Kristopher C. Orozco
10/16/2025 24,492 10 2025 50.00

LINE	DETAIL DESCRIPTION	AMOUNT	ACCOUNT NO	ACCOUNT DESCRIPTION
001	window cleaning exterior - Village Office	50.00	AA.1620.400	Municipal Bldg - Contractual Exp

TOTAL VOUCHERS FOR VENDOR: 00KRISTOPH # OF VOUCHERS: 1 TOTAL AMOUNT: 50.00

VC 00036520 5.1 gal fuel 00000LAKES Lakes Gas
10/16/2025 24,492 10 2025 17.33

LINE	DETAIL DESCRIPTION	AMOUNT	ACCOUNT NO	ACCOUNT DESCRIPTION
001	5.1 gal fuel	17.33	FF.8320.435	Source/Supply - Vehicle Fuel

TOTAL VOUCHERS FOR VENDOR: 00000LAKES # OF VOUCHERS: 1 TOTAL AMOUNT: 17.33

VC 00036521 #8459-009 biosolids alt services through 5/24/25 0000LARSON LDG Engineers & Architects, PC
10/16/2025 24,492 10 2025 6,900.00

LINE	DETAIL DESCRIPTION	AMOUNT	ACCOUNT NO	ACCOUNT DESCRIPTION

001	#8459-009 biosolids alt services through 5/24/25	6,900.00	HM.8120.400	Contractual - Biosolids Disposal EPG #8459-009

VC 00036586 Engineering Services-#8459-009 Biosolids 0000LARSON LDG Engineers & Architects, PC
10/17/2025 24,492 10 2025 3,900.00

LINE	DETAIL DESCRIPTION	AMOUNT	ACCOUNT NO	ACCOUNT DESCRIPTION
001	Engineering Services-#8459-009 Biosolids	3,900.00	HM.8120.400	Contractual - Biosolids Disposal EPG #8459-009

TOTAL VOUCHERS FOR VENDOR: 0000LARSON # OF VOUCHERS: 2 TOTAL AMOUNT: 10,800.00

VC 00036601 PO #1596 - LED street lights - Reimbusement IEEP 0000LEOTEK Leotek Electronics USA LLC.
10/20/2025 24,492 10 2025 26,750.00

LINE	DETAIL DESCRIPTION	AMOUNT	ACCOUNT NO	ACCOUNT DESCRIPTION
001	PO #1596 LED Street Lights - reimbursement through IEEP funds	26,750.00	EE.0123.000	Materials & Supplies Exp

TOTAL VOUCHERS FOR VENDOR: 0000LEOTEK # OF VOUCHERS: 1 TOTAL AMOUNT: 26,750.00

VC 00036587 Lab Testing 00MICROBAC Microbac Laboratories, Inc
10/17/2025 24,492 10 2025 162.09

LINE	DETAIL DESCRIPTION	AMOUNT	ACCOUNT NO	ACCOUNT DESCRIPTION
001	Lab Testing-Coliform	162.09	FF.8320.425	Source/Supply - Lab Analysis

TOTAL VOUCHERS FOR VENDOR: 00MICROBAC # OF VOUCHERS: 1 TOTAL AMOUNT: 162.09

VC 00036522 tss, cbod, tkn, tp, fecal 00MICROB-G Microbac Laboratories, Inc.
10/16/2025 24,492 10 2025 844.36

LINE	DETAIL DESCRIPTION	AMOUNT	ACCOUNT NO	ACCOUNT DESCRIPTION
001	lab work	422.18	JT.8130.425	Treatment - Lab Analysis Exp
002	lab work	422.18	JT.8130.425	Treatment - Lab Analysis Exp

Voucher Abstract

Village of Watkins Glen

VC 00036523 tss, cbod, tkn, tp, fecal 00MICROB-G Microbac Laboratories, Inc.
10/16/2025 24,492 10 2025 422.18

LINE	DETAIL DESCRIPTION	AMOUNT	ACCOUNT NO	ACCOUNT DESCRIPTION
001	lab work	422.18	JT.8130.425	Treatment - Lab Analysis Exp

TOTAL VOUCHERS FOR VENDOR: 00MICROB-G # OF VOUCHERS: 2 TOTAL AMOUNT: 1,266.54

VC 00036524 Demand 7480 & Regular 4,121,610 kwh 000000NYPA New York Power Authority
10/16/2025 24,492 10 2025 136,657.35

LINE	DETAIL DESCRIPTION	AMOUNT	ACCOUNT NO	ACCOUNT DESCRIPTION
001	Demand 7480 & Regular 4,121,610 kwh	136,657.35	EE.0721.000	Electricity Purchased

TOTAL VOUCHERS FOR VENDOR: 000000NYPA # OF VOUCHERS: 1 TOTAL AMOUNT: 136,657.35

VC 00036525 Near 3600 State Route 329 - prv 00000NYSEG New York State Electric & Gas
10/16/2025 24,492 10 2025 105.02

LINE	DETAIL DESCRIPTION	AMOUNT	ACCOUNT NO	ACCOUNT DESCRIPTION
001	PRV Station, Near 3600 St Rte 329 1001-2585-468	105.02	FF.8320.413	Source/Supply - Utilities - NYSEG

VC 00036526 129 Marina Drive - Montour;s pmp station 00000NYSEG New York State Electric & Gas
10/16/2025 24,492 10 2025 801.96

LINE	DETAIL DESCRIPTION	AMOUNT	ACCOUNT NO	ACCOUNT DESCRIPTION
001	129 Marina Drive Montour 1004-8923-071	761.52	JT.8130.414	Treatment - Utilities - Electric
002	129 Marina Drive Montour 1004-8923-071	40.44	JT.8130.415	Treatment - Utilities - Gas

VC 00036588 201 N Perry 00000NYSEG New York State Electric & Gas
10/17/2025 24,492 10 2025 84.37

LINE	DETAIL DESCRIPTION	AMOUNT	ACCOUNT NO	ACCOUNT DESCRIPTION
001	201 N Perry St 1001-5685-760	84.37	AA.3410.410	Fire - Utilities Expense

VC 00036590 449 S Clute - Gas 00000NYSEG New York State Electric & Gas
10/17/2025 24,492 10 2025 594.11

LINE	DETAIL DESCRIPTION	AMOUNT	ACCOUNT NO	ACCOUNT DESCRIPTION

Voucher Abstract

Village of Watkins Glen

001	449 S Clute Rd 1004-9195-612	594.11	JT.8130.415	Treatment - Utilities - Gas

VC 00036591 406 Steuben 00000NYSEG New York State Electric & Gas
10/17/2025 24,492 10 2025 69.89

LINE	DETAIL DESCRIPTION	AMOUNT	ACCOUNT NO	ACCOUNT DESCRIPTION
001	406 Steuben St 1001-5625-428	69.89	FF.8320.413	Source/Supply - Utilities - NYSEG

TOTAL VOUCHERS FOR VENDOR: 00000NYSEG # OF VOUCHERS: 5 TOTAL AMOUNT: 1,655.35

VC 00036527 roller skate - freeze dried candy 000NGROVER Nikole Grover
10/16/2025 24,492 10 2025 202.00

LINE	DETAIL DESCRIPTION	AMOUNT	ACCOUNT NO	ACCOUNT DESCRIPTION
001	roller skate - freeze dried candy	99.00	AA.7140.430	CC/EC - Materials & Supplies
002	roller skate - freeze dried candy	103.00	AA.7140.430	CC/EC - Materials & Supplies

TOTAL VOUCHERS FOR VENDOR: 000NGROVER # OF VOUCHERS: 1 TOTAL AMOUNT: 202.00

VC 00036504 annual membership feee for period ending 9/30/26 000NYSSMFO NYSSMFO
10/16/2025 24,492 10 2025 50.00

LINE	DETAIL DESCRIPTION	AMOUNT	ACCOUNT NO	ACCOUNT DESCRIPTION
001	annual membership feee for period ending 9/30/26	50.00	AA.1325.400	Treasurer - Contractual Exp

TOTAL VOUCHERS FOR VENDOR: 000NYSSMFO # OF VOUCHERS: 1 TOTAL AMOUNT: 50.00

VC 00036600 Rr#1 Energized maint., relay testing, & oil sample 00OCONNELL O'Connell Electric Co
10/20/2025 24,492 10 2025 26,969.00

LINE	DETAIL DESCRIPTION	AMOUNT	ACCOUNT NO	ACCOUNT DESCRIPTION
001	Rr#1 Energized maint., relay testing, & oil samples per PO#1571	26,969.00	EE.0123.000	Materials & Supplies Exp

Voucher Abstract

Village of Watkins Glen

TOTAL VOUCHERS FOR VENDOR: 00OCONNELL # OF VOUCHERS: 1 TOTAL AMOUNT: 26,969.00

VC 00036604 fines & fees collected for September 2025 00COMPTROL Office of the State Comptroller
10/20/2025 24,492 10 2025 9,332.00

LINE	DETAIL DESCRIPTION	AMOUNT	ACCOUNT NO	ACCOUNT DESCRIPTION
001	fines & fees collected for September 2025	9,332.00	AA.0631.000	Due To Other Govts

TOTAL VOUCHERS FOR VENDOR: 00COMPTROL # OF VOUCHERS: 1 TOTAL AMOUNT: 9,332.00

VC 00036597 commercial general liability - 112 Magee Point 00000PERRY Perry & Carroll
10/17/2025 24,492 10 2025 693.75

LINE	DETAIL DESCRIPTION	AMOUNT	ACCOUNT NO	ACCOUNT DESCRIPTION
001	commercial general liability - 112 Magee Point	693.75	AA.1910.400	UNALLOCATED INSURANCE - CONTRACTUAL

TOTAL VOUCHERS FOR VENDOR: 00000PERRY # OF VOUCHERS: 1 TOTAL AMOUNT: 693.75

VC 00036528 M. Hyde, USPS, County Clerk, Wal-Mart, Global Pkg 00PETTYCAS Petty Cash
10/16/2025 24,492 10 2025 328.38

LINE	DETAIL DESCRIPTION	AMOUNT	ACCOUNT NO	ACCOUNT DESCRIPTION
001	M. Hyde	24.80	GG.8120.431	Sanitary Sewer - Materials & Supplies
002	USPS	10.99	GG.8110.425	Sewer - Office Supplies
003	USPS	103.74	AA.3120.430	Police - Materials & Supplies
004	Project-Global Pkg	14.37	HF.7110.400	ADA Playground Contractual Exp
005	Global Pkg/County Clerk	100.14	AA.1420.400	Legal - Contractual Exp
006	Wal-Mart	41.87	AA.7110.430	Parks - Materials & Supplies
007	Global Pkg	12.31	AA.7120.400	Buildings & Grounds - Contractual
008	USPS	20.16	AA.8010.400	Zoning - Contractual

Voucher Abstract

Village of Watkins Glen

TOTAL VOUCHERS FOR VENDOR: 00PETTYCAS # OF VOUCHERS: 1 TOTAL AMOUNT: 328.38

VC 00036529 hand tools & straps 00000PIKES Pike's Engine & Machine
10/16/2025 24,492 10 2025 100.55

LINE	DETAIL DESCRIPTION	AMOUNT	ACCOUNT NO	ACCOUNT DESCRIPTION
001	hand tools & straps	100.55	FF.8340.432	Transmission - Meters

TOTAL VOUCHERS FOR VENDOR: 00000PIKES # OF VOUCHERS: 1 TOTAL AMOUNT: 100.55

VC 00036530 material for catch basin & concrete 000WLUMBER RCA3 Inc dba Watkins Lumber, Inc
10/16/2025 24,492 10 2025 78.11

LINE	DETAIL DESCRIPTION	AMOUNT	ACCOUNT NO	ACCOUNT DESCRIPTION
001	material for catch basin	62.12	AA.5110.430	Streets - Materials & Supplies
002	concrete	15.99	AA.5110.430	Streets - Materials & Supplies

VC 00036531 outlet cover 000WLUMBER RCA3 Inc dba Watkins Lumber, Inc
10/16/2025 24,492 10 2025 0.79

LINE	DETAIL DESCRIPTION	AMOUNT	ACCOUNT NO	ACCOUNT DESCRIPTION
001	outlet cover	0.79	AA.7120.430	Buildings & Grounds - Materials & Supplies

VC 00036532 bolts & 9v battery 000WLUMBER RCA3 Inc dba Watkins Lumber, Inc
10/17/2025 24,492 10 2025 61.16

LINE	DETAIL DESCRIPTION	AMOUNT	ACCOUNT NO	ACCOUNT DESCRIPTION
001	bolts for new parking sign	53.17	AA.7110.430	Parks - Materials & Supplies
002	9v battery	7.99	AA.7120.430	Buildings & Grounds - Materials & Supplies

VC 00036533 2x10x8 - picnic table 000WLUMBER RCA3 Inc dba Watkins Lumber, Inc
10/17/2025 24,492 10 2025 13.95

LINE	DETAIL DESCRIPTION	AMOUNT	ACCOUNT NO	ACCOUNT DESCRIPTION
001	2x10x8 - picnic table	13.95	AA.7120.430	Buildings & Grounds - Materials & Supplies

VC 00036534 treated lumber - park office 000WLUMBER RCA3 Inc dba Watkins Lumber, Inc
10/17/2025 24,492 10 2025 63.94

Voucher Abstract

Village of Watkins Glen

LINE	DETAIL DESCRIPTION	AMOUNT	ACCOUNT NO	ACCOUNT DESCRIPTION
001	treated lumber - park office	63.94	AA.7120.430	Buildings & Grounds - Materials & Supplies

VC 00036535 sanding disc 000WLUMBER RCA3 Inc dba Watkins Lumber, Inc
10/17/2025 24,492 10 2025 81.98

LINE	DETAIL DESCRIPTION	AMOUNT	ACCOUNT NO	ACCOUNT DESCRIPTION
001	sanding disc	81.98	AA.7120.430	Buildings & Grounds - Materials & Supplies

VC 00036602 pvc cutter 000WLUMBER RCA3 Inc dba Watkins Lumber, Inc
10/20/2025 24,492 10 2025 22.99

LINE	DETAIL DESCRIPTION	AMOUNT	ACCOUNT NO	ACCOUNT DESCRIPTION
001	pvc cutter	22.99	AA.7120.430	Buildings & Grounds - Materials & Supplies

TOTAL VOUCHERS FOR VENDOR: 000WLUMBER # OF VOUCHERS: 7 TOTAL AMOUNT: 322.92

VC 00036536 standard portable toilets RENTALSTOG Rentals To Go
10/17/2025 24,492 10 2025 480.00

LINE	DETAIL DESCRIPTION	AMOUNT	ACCOUNT NO	ACCOUNT DESCRIPTION
001	1 standard - Glenwood Cemetery location 0001 - 10/2/25-10/29/25	120.00	AA.8810.420	Cemetery - Materials & Supplies
002	1 standard - boat launch location 0003 - 10/6/25-11/2/25	120.00	AA.7110.400	Parks - Contractual Expenses
003	1 standard - Clute Park location 0005 - 10/2/25-10/29/25 now kayak	120.00	AA.7110.400	Parks - Contractual Expenses
004	1 standard - Clute Park location 0006 - 10/2/25-10/29/25	120.00	AA.7110.400	Parks - Contractual Expenses

VC 00036593 Standard portable toilets 710/25 -8/6/25 RENTALSTOG Rentals To Go
10/17/2025 24,492 10 2025 600.00

LINE	DETAIL DESCRIPTION	AMOUNT	ACCOUNT NO	ACCOUNT DESCRIPTION
001	Glenwood Cemetery location 0001	120.00	AA.8810.420	Cemetery - Materials & Supplies
002	boat launch location 0003	120.00	AA.7110.400	Parks - Contractual Expenses
003	kayak launch location 0004	120.00	AA.7110.400	Parks - Contractual Expenses
004	clute park location 0005 now kayak	120.00	AA.7110.400	Parks - Contractual Expenses
005	clute park location 0006	120.00	AA.7110.400	Parks - Contractual Expenses

TOTAL VOUCHERS FOR VENDOR: RENTALSTOG # OF VOUCHERS: 2 TOTAL AMOUNT: 1,080.00

Voucher Abstract

Village of Watkins Glen

VC 00036537 items for roller skate snack bar 0SAMS CLUB Sam's Club/ Synchrony Bank
10/17/2025 24,492 10 2025 359.76

LINE	DETAIL DESCRIPTION	AMOUNT	ACCOUNT NO	ACCOUNT DESCRIPTION
001	items for roller skate snack bar	221.24	AA.7140.430	CC/EC - Materials & Supplies
002	items for roller skate snack bar	138.52	AA.7140.430	CC/EC - Materials & Supplies

TOTAL VOUCHERS FOR VENDOR: 0SAMS CLUB # OF VOUCHERS: 1 TOTAL AMOUNT: 359.76

VC 00036538 steel cleaner, floor cleaner, toilet paper, soap 0000SANICO Sanico, Inc
10/17/2025 24,492 10 2025 683.36

LINE	DETAIL DESCRIPTION	AMOUNT	ACCOUNT NO	ACCOUNT DESCRIPTION
001	steel cleaner, floor cleaner	55.85	AA.7140.430	CC/EC - Materials & Supplies
002	steel cleaner, floor cleaner	55.85	AA.7180.420	Campground - Repairs & Maintenance
003	steel cleaner, floor cleaner	55.85	AA.7110.430	Parks - Materials & Supplies
004	toilet paper, soap	171.93	AA.7140.430	CC/EC - Materials & Supplies
005	toilet paper, soap	171.95	AA.7180.420	Campground - Repairs & Maintenance
006	toilet paper, soap	171.93	AA.7110.430	Parks - Materials & Supplies

TOTAL VOUCHERS FOR VENDOR: 0000SANICO # OF VOUCHERS: 1 TOTAL AMOUNT: 683.36

VC 00036543 signs 0SCHYSUPER Schuyler County Association of Highway
10/17/2025 24,492 10 2025 162.90

LINE	DETAIL DESCRIPTION	AMOUNT	ACCOUNT NO	ACCOUNT DESCRIPTION
001	signs	162.90	AA.5110.450	Streets -Signs

TOTAL VOUCHERS FOR VENDOR: 0SCHYSUPER # OF VOUCHERS: 1 TOTAL AMOUNT: 162.90

VC 00036542 utilities - July, August, & September 2025 SCHYINFOTE Schuyler County Building and Grounds
10/17/2025 24,492 10 2025 1,705.14

Voucher Abstract

Village of Watkins Glen

LINE	DETAIL DESCRIPTION	AMOUNT	ACCOUNT NO	ACCOUNT DESCRIPTION
001	utilities - July, August, & September 2025	852.57	AA.5110.410	Streets - Utilities - Schuyler E/S/W
002	utilities - July, August, & September 2025	852.57	EE.0741.220	Utilities - All

TOTAL VOUCHERS FOR VENDOR: SCHYINFOTE # OF VOUCHERS: 1 TOTAL AMOUNT: 1,705.14

VC 00036539 CAR 4 brakes, oil change, & fluids 00SCHYHIGH Schuyler County Treasurer
10/17/2025 24,492 10 2025 163.47

LINE	DETAIL DESCRIPTION	AMOUNT	ACCOUNT NO	ACCOUNT DESCRIPTION
001	CAR 4 brakes, oil change, & fluids	163.47	AA.3120.420	Police - Vehicle Repairs

VC 00036540 brakes & shop supplies 00SCHYHIGH Schuyler County Treasurer
10/17/2025 24,492 10 2025 131.99

LINE	DETAIL DESCRIPTION	AMOUNT	ACCOUNT NO	ACCOUNT DESCRIPTION
001	brakes & shop supplies	131.99	FF.8340.420	Transmission - Watkins - Repairs & Maint

VC 00036541 2018 F-150 service 00SCHYHIGH Schuyler County Treasurer
10/17/2025 24,492 10 2025 39.70

LINE	DETAIL DESCRIPTION	AMOUNT	ACCOUNT NO	ACCOUNT DESCRIPTION
001	2018 F-150 service	39.70	EE.0804.000	Transportation Clearing

VC 00036544 repair F350 collections truck 00SCHYHIGH Schuyler County Treasurer
10/17/2025 24,492 10 2025 276.43

LINE	DETAIL DESCRIPTION	AMOUNT	ACCOUNT NO	ACCOUNT DESCRIPTION
001	repair F350 collections truck	276.43	GG.8120.420	Sanitary Sewer - Collection System

TOTAL VOUCHERS FOR VENDOR: 00SCHYHIGH # OF VOUCHERS: 4 TOTAL AMOUNT: 611.59

VC 00036545 Phone Charges October 2025 SCHUYLERCO Schuyler County Treasurer
10/17/2025 24,492 10 2025 54.00

LINE	DETAIL DESCRIPTION	AMOUNT	ACCOUNT NO	ACCOUNT DESCRIPTION
001	Phone Charges October 2025	27.00	AA.5110.412	Streets - Schuyler Phone/Internet
002	Phone Charges October 2025	27.00	EE.0741.220	Utilities - All

TOTAL VOUCHERS FOR VENDOR: SCHUYLERCO # OF VOUCHERS: 1 TOTAL AMOUNT: 54.00

VC 00036547 repair & update WGFD WIFI 0000000SCT SCT Computers
10/17/2025 24,492 10 2025 37.50

LINE	DETAIL DESCRIPTION	AMOUNT	ACCOUNT NO	ACCOUNT DESCRIPTION
001	repair & update WGFD WIFI	37.50	AA.3410.400	Fire - Contractual Exp

VC 00036549 routine software maintenance 0000000SCT SCT Computers
10/17/2025 24,492 10 2025 225.00

LINE	DETAIL DESCRIPTION	AMOUNT	ACCOUNT NO	ACCOUNT DESCRIPTION
001	routine software maintenance	61.50	AA.1410.400	Clerk - Contractual Exp
002	routine software maintenance	24.00	AA.7110.400	Parks - Contractual Expenses
003	routine software maintenance	18.00	AA.3410.400	Fire - Contractual Exp
004	routine software maintenance	49.50	AA.8010.400	Zoning - Contractual
005	routine software maintenance	6.00	AA.5110.400	Streets - Contractual Exp
006	routine software maintenance	6.00	EE.0781.500	Contractual Expenses
007	routine software maintenance	24.00	FF.8310.400	Water - Contractual
008	routine software maintenance	30.00	JT.8110.400	Sewer Admin - Contractual Exp
009	routine software maintenance	6.00	AA.1010.400	Board - Contractual Expenses

VC 00036551 new front destk computer & set up 0000000SCT SCT Computers
10/17/2025 24,492 10 2025 903.50

LINE	DETAIL DESCRIPTION	AMOUNT	ACCOUNT NO	ACCOUNT DESCRIPTION
001	new front desk computer set up	903.50	AA.7110.400	Parks - Contractual Expenses

VC 00036595 2 computers, 4 monitors - applies to tech grant 0000000SCT SCT Computers
10/17/2025 24,492 10 2025 2,480.00

LINE	DETAIL DESCRIPTION	AMOUNT	ACCOUNT NO	ACCOUNT DESCRIPTION
001	2 computers, 4 monitors - applies to tech grant	2,480.00	AA.3120.430	Police - Materials & Supplies

TOTAL VOUCHERS FOR VENDOR: 0000000SCT # OF VOUCHERS: 4 TOTAL AMOUNT: 3,646.00

Voucher Abstract

Village of Watkins Glen

VC 00036553 Disability Premiums SHELTERPNT ShelterPoint Life Insurance Co
10/17/2025 24,492 10 2025 534.45

LINE	DETAIL DESCRIPTION	AMOUNT	ACCOUNT NO	ACCOUNT DESCRIPTION
001	disability premiums	412.02	AA.9055.800	Disability Insurance
002	disability premiums	35.07	FF.9055.800	Disability Insurance
003	disability premiums	34.02	JT.9055.800	Disability Insurance
004	disability premiums	41.37	EE.0785.100	Health Insurance
005		11.97	GG.9055.800	Disability Insurance

TOTAL VOUCHERS FOR VENDOR: SHELTERPNT # OF VOUCHERS: 1 TOTAL AMOUNT: 534.45

VC 00036562 alum, chlorine, carus, delivery, deposit, return 00000SLACK Slack Chemical
10/17/2025 24,492 10 2025 3,198.03

LINE	DETAIL DESCRIPTION	AMOUNT	ACCOUNT NO	ACCOUNT DESCRIPTION
001	alum	445.50	FF.8330.401	Water Purification - Alum
002	chlorine	1,842.00	FF.8330.400	Water Purification - Chlorine
003	carus	892.53	FF.8330.403	Water Purification - Corrosion Control
004	delivery	75.00	FF.8330.400	Water Purification - Chlorine
005	deposit	595.00	FF.8330.401	Water Purification - Alum
006	return	-652.00	FF.8330.400	Water Purification - Chlorine

TOTAL VOUCHERS FOR VENDOR: 00000SLACK # OF VOUCHERS: 1 TOTAL AMOUNT: 3,198.03

VC 00036565 pulley mower SOUTHERNFL Southern Fingerlakes Equipment LLC
10/17/2025 24,492 10 2025 30.86

LINE	DETAIL DESCRIPTION	AMOUNT	ACCOUNT NO	ACCOUNT DESCRIPTION
001	pulley mower	30.86	AA.7120.420	Buildings & Grounds - Repairs & Maintenance

VC 00036567 hexagon nut SOUTHERNFL Southern Fingerlakes Equipment LLC
10/17/2025 24,492 10 2025 1.99

LINE	DETAIL DESCRIPTION	AMOUNT	ACCOUNT NO	ACCOUNT DESCRIPTION
001	hexagon nut	1.99	FF.8320.432	Source/Supply - Tools

Voucher Abstract

Village of Watkins Glen

TOTAL VOUCHERS FOR VENDOR: SOUTHERNFL # OF VOUCHERS: 2 TOTAL AMOUNT: 32.85

VC 00036570 clute park campground cable tv 10/1/25 - 10/31/25 00SPECTRUM Spectrum
10/17/2025 24,492 10 2025 1,607.00

LINE	DETAIL DESCRIPTION	AMOUNT	ACCOUNT NO	ACCOUNT DESCRIPTION
001	clute park campground cable tv 10/1/25 - 10/31/25	1,607.00	AA.7180.410	Campground - Utilities - Phone

TOTAL VOUCHERS FOR VENDOR: 00SPECTRUM # OF VOUCHERS: 1 TOTAL AMOUNT: 1,607.00

VC 00036572 kitchen storage, thermometers for DOH food permit 00SPARRISH Stacey Parrish
10/17/2025 24,492 10 2025 74.07

LINE	DETAIL DESCRIPTION	AMOUNT	ACCOUNT NO	ACCOUNT DESCRIPTION
001	kitchen storage, thermometers for DOH food permit	74.07	AA.7310.430	Summer Rec - Materials & Supplies

TOTAL VOUCHERS FOR VENDOR: 00SPARRISH # OF VOUCHERS: 1 TOTAL AMOUNT: 74.07

VC 00036575 paper towels, return, buckets, stand, rolls 000STAPLES Staples Contract & Commercial
10/17/2025 24,492 10 2025 58.13

LINE	DETAIL DESCRIPTION	AMOUNT	ACCOUNT NO	ACCOUNT DESCRIPTION
001	trifold/paper towels	146.48	JT.8110.421	Sewer Admin - Janitorial Supplies
002	adding machine rolls/correction tape	51.20	AA.1410.430	Clerk - Materials & Supplies Exp
003	mop buckets	97.96	AA.7140.420	CC/EC - Repairs & Maintenance
004	monitor stand	17.31	AA.1410.430	Clerk - Materials & Supplies Exp
005	perf paper returned	-84.94	EE.0781.500	Contractual Expenses
006	perf paper returned	-84.94	FF.8310.420	Water - Repairs & Maintenance
007	perf paper returned	-84.94	JT.8110.421	Sewer Admin - Janitorial Supplies

Voucher Abstract

Village of Watkins Glen

TOTAL VOUCHERS FOR VENDOR: 000STAPLES # OF VOUCHERS: 1 TOTAL AMOUNT: 58.13

VC 00036578 milwaukee 1/2" guy wire, burndy UR U-Die 0000STUART Stuart C Irby Co
10/17/2025 24,492 10 2025 649.25

LINE	DETAIL DESCRIPTION	AMOUNT	ACCOUNT NO	ACCOUNT DESCRIPTION
001	milwaukee 1/2" guy wire cutter head	504.25	EE.0787.000	Repairs & Maintenance Supplies
002	burndy UR U-Die	145.00	EE.0787.000	Repairs & Maintenance Supplies

TOTAL VOUCHERS FOR VENDOR: 0000STUART # OF VOUCHERS: 1 TOTAL AMOUNT: 649.25

VC 00036583 T2 MobilePay additional signs Q-53929 & Q-54012 T2 SYSTEMS T2 Systems, Inc
10/17/2025 24,492 10 2025 1,300.00

LINE	DETAIL DESCRIPTION	AMOUNT	ACCOUNT NO	ACCOUNT DESCRIPTION
001	T2 MobilePay additional signs Q-53929 & Q-54012	1,300.00	AA.7110.430	Parks - Materials & Supplies

VC 00036598 parking enforcement system PO# 1581 T2 SYSTEMS T2 Systems, Inc
10/17/2025 24,492 10 2025 10,426.00

LINE	DETAIL DESCRIPTION	AMOUNT	ACCOUNT NO	ACCOUNT DESCRIPTION
001	parking enforcement system PO# 1581	10,426.00	AA.3120.400	Police - Contractual

TOTAL VOUCHERS FOR VENDOR: T2 SYSTEMS # OF VOUCHERS: 2 TOTAL AMOUNT: 11,726.00

VC 00036585 ANSI & Dielectric testing- Digger, Bucket trucks 00000TEREX Terex USA, LLC.
10/17/2025 24,492 10 2025 5,101.61

LINE	DETAIL DESCRIPTION	AMOUNT	ACCOUNT NO	ACCOUNT DESCRIPTION
001	digger truck ANSI & Dielectric testing	2,039.19	EE.0804.000	Transportation Clearing
002	big bucket ANSI & Dielectric testing	1,589.01	EE.0804.000	Transportation Clearing
003	small bucket ANSI & Dielectric testing	1,473.41	EE.0804.000	Transportation Clearing

Voucher Abstract

Village of Watkins Glen

TOTAL VOUCHERS FOR VENDOR: 00000TEREX # OF VOUCHERS: 1 TOTAL AMOUNT: 5,101.61

VC 00036546 Ad-October 2025 0THEODESSA The Odessa File
10/17/2025 24,492 10 2025 150.00

LINE	DETAIL DESCRIPTION	AMOUNT	ACCOUNT NO	ACCOUNT DESCRIPTION
001	Ad-October 2025	150.00	AA.7110.400	Parks - Contractual Expenses

TOTAL VOUCHERS FOR VENDOR: 0THEODESSA # OF VOUCHERS: 1 TOTAL AMOUNT: 150.00

VC 00036548 Reimbursement-Mileage/Toll 00TBALLARD Thomas Ballard
10/17/2025 24,492 10 2025 213.27

LINE	DETAIL DESCRIPTION	AMOUNT	ACCOUNT NO	ACCOUNT DESCRIPTION
001	Reimbursement-Mileage/Toll	213.27	EE.0785.100	Health Insurance

TOTAL VOUCHERS FOR VENDOR: 00TBALLARD # OF VOUCHERS: 1 TOTAL AMOUNT: 213.27

VC 00036550 EC-Condensation Repairs and Materials 00000TRANE Trane US Inc
10/17/2025 24,492 10 2025 7,005.00

LINE	DETAIL DESCRIPTION	AMOUNT	ACCOUNT NO	ACCOUNT DESCRIPTION
001	EC Condensation Repairs	3,849.00	AA.7140.400	CC/EC - Contractual Expense
002	EC Condensation Repairs	3,156.00	AA.7140.400	CC/EC - Contractual Expense

VC 00036596 labor & material - board room AC leak 00000TRANE Trane US Inc
10/17/2025 24,492 10 2025 2,348.99

LINE	DETAIL DESCRIPTION	AMOUNT	ACCOUNT NO	ACCOUNT DESCRIPTION
001	labor & material - board room AC leak	2,348.99	AA.1620.420	Municipal Bldg - Repairs & Maintenance

Voucher Abstract

Village of Watkins Glen

TOTAL VOUCHERS FOR VENDOR: 00000TRANE # OF VOUCHERS: 2 TOTAL AMOUNT: 9,353.99

VC 00036494 Sept Late Positive Response 0000000DIG UDig NY Inc (UFPO)
10/10/2025 24,492 10 2025 2.00

LINE	DETAIL DESCRIPTION	AMOUNT	ACCOUNT NO	ACCOUNT DESCRIPTION
001	September 2025 Late Response	2.00	FF.8310.400	Water - Contractual

TOTAL VOUCHERS FOR VENDOR: 0000000DIG # OF VOUCHERS: 1 TOTAL AMOUNT: 2.00

VC 00036552 Signs, Phosver, Dye, DPD, Paint 000USABLUE USA Blue Book
10/17/2025 24,492 10 2025 690.79

LINE	DETAIL DESCRIPTION	AMOUNT	ACCOUNT NO	ACCOUNT DESCRIPTION
001	Sign, Gloves, PhosVer	201.03	FF.8340.430	Transmission - Materials & Supplies Exp
002	Tracing Dye, Paint	489.76	FF.8340.430	Transmission - Materials & Supplies Exp

TOTAL VOUCHERS FOR VENDOR: 000USABLUE # OF VOUCHERS: 1 TOTAL AMOUNT: 690.79

VC 00036554 Telephone Service 00VERIZON1 Verizon
10/17/2025 24,492 10 2025 394.19

LINE	DETAIL DESCRIPTION	AMOUNT	ACCOUNT NO	ACCOUNT DESCRIPTION
001	535-2736	211.97	AA.1410.410	Clerk - Utilities Expense
002	535-2736	141.32	AA.3120.410	Police - Utilities
003	535-7182	40.90	AA.3120.410	Police - Utilities

TOTAL VOUCHERS FOR VENDOR: 00VERIZON1 # OF VOUCHERS: 1 TOTAL AMOUNT: 394.19

Voucher Abstract

Village of Watkins Glen

VC 00036555 Refund-EC Deposit 5/16/25 000000WGCS Watkins Glen Central School
10/17/2025 24,492 10 2025 250.00

LINE	DETAIL DESCRIPTION	AMOUNT	ACCOUNT NO	ACCOUNT DESCRIPTION
001	Refund-EC Deposit 5/16/25	250.00	AA.0615.000	Customer Deposits

TOTAL VOUCHERS FOR VENDOR: 000000WGCS # OF VOUCHERS: 1 TOTAL AMOUNT: 250.00

VC 00036556 Spade Bit 00WGSUPPLY Watkins Glen Supply Inc
10/17/2025 24,492 10 2025 13.49

LINE	DETAIL DESCRIPTION	AMOUNT	ACCOUNT NO	ACCOUNT DESCRIPTION
001	Spade Bit	13.49	AA.7120.430	Buildings & Grounds - Materials & Supplies

VC 00036557 Shop Vac/Drywall Knife 00WGSUPPLY Watkins Glen Supply Inc
10/17/2025 24,492 10 2025 151.87

LINE	DETAIL DESCRIPTION	AMOUNT	ACCOUNT NO	ACCOUNT DESCRIPTION
001	Shop Vac, Drywall Knife, Duster	168.96	AA.7120.430	Buildings & Grounds - Materials & Supplies
002	Duster Return	-17.09	AA.7120.430	Buildings & Grounds - Materials & Supplies

VC 00036558 PVC Pipe 00WGSUPPLY Watkins Glen Supply Inc
10/17/2025 24,492 10 2025 45.17

LINE	DETAIL DESCRIPTION	AMOUNT	ACCOUNT NO	ACCOUNT DESCRIPTION
001	PVC Pipe-Muni Office	45.17	AA.7120.430	Buildings & Grounds - Materials & Supplies

VC 00036559 Batteries and Hooks 00WGSUPPLY Watkins Glen Supply Inc
10/17/2025 24,492 10 2025 26.28

LINE	DETAIL DESCRIPTION	AMOUNT	ACCOUNT NO	ACCOUNT DESCRIPTION
001	Batteries and Hooks	26.28	FF.8310.425	Water - Office Supplies

VC 00036560 PVC 00WGSUPPLY Watkins Glen Supply Inc
10/17/2025 24,492 10 2025 2.33

LINE	DETAIL DESCRIPTION	AMOUNT	ACCOUNT NO	ACCOUNT DESCRIPTION
001	PVC	2.33	AA.7120.420	Buildings & Grounds - Repairs & Maintenance

VC 00036561 Sump Pump 00WGSUPPLY Watkins Glen Supply Inc
10/17/2025 24,492 10 2025 279.00

LINE	DETAIL DESCRIPTION	AMOUNT	ACCOUNT NO	ACCOUNT DESCRIPTION

001	Sump Pump	279.00	AA.1620.420	Municipal Bldg - Repairs & Maintenance

VC 00036563 Outlet Plug 00WGSUPPLY Watkins Glen Supply Inc
10/17/2025 24,492 10 2025 6.29

LINE	DETAIL DESCRIPTION	AMOUNT	ACCOUNT NO	ACCOUNT DESCRIPTION
001	Outlet Plug	6.29	AA.7120.420	Buildings & Grounds - Repairs & Maintenance

VC 00036564 Extension Cord Plugs 00WGSUPPLY Watkins Glen Supply Inc
10/17/2025 24,492 10 2025 11.41

LINE	DETAIL DESCRIPTION	AMOUNT	ACCOUNT NO	ACCOUNT DESCRIPTION
001	Extension Cord Plugs	11.41	EE.0787.000	Repairs & Maintenance Supplies

VC 00036566 Bolts 00WGSUPPLY Watkins Glen Supply Inc
10/17/2025 24,492 10 2025 4.49

LINE	DETAIL DESCRIPTION	AMOUNT	ACCOUNT NO	ACCOUNT DESCRIPTION
001	Bolts	4.49	AA.7120.420	Buildings & Grounds - Repairs & Maintenance

VC 00036568 Pipe Fitting 00WGSUPPLY Watkins Glen Supply Inc
10/17/2025 24,492 10 2025 4.49

LINE	DETAIL DESCRIPTION	AMOUNT	ACCOUNT NO	ACCOUNT DESCRIPTION
001	Pipe Fitting	4.49	AA.7120.420	Buildings & Grounds - Repairs & Maintenance

VC 00036569 Paint Supplies 00WGSUPPLY Watkins Glen Supply Inc
10/17/2025 24,492 10 2025 5.36

LINE	DETAIL DESCRIPTION	AMOUNT	ACCOUNT NO	ACCOUNT DESCRIPTION
001	Paint Supplies	5.36	AA.7120.430	Buildings & Grounds - Materials & Supplies

VC 00036571 Paint 00WGSUPPLY Watkins Glen Supply Inc
10/17/2025 24,492 10 2025 49.08

LINE	DETAIL DESCRIPTION	AMOUNT	ACCOUNT NO	ACCOUNT DESCRIPTION
001	Paint	49.08	AA.7120.430	Buildings & Grounds - Materials & Supplies

VC 00036573 Batteries 00WGSUPPLY Watkins Glen Supply Inc
10/17/2025 24,492 10 2025 17.99

LINE	DETAIL DESCRIPTION	AMOUNT	ACCOUNT NO	ACCOUNT DESCRIPTION
001	Batteries	17.99	FF.8310.425	Water - Office Supplies

VC 00036574 Marking Paint 00WGSUPPLY Watkins Glen Supply Inc
10/17/2025 24,492 10 2025 54.95

LINE	DETAIL DESCRIPTION	AMOUNT	ACCOUNT NO	ACCOUNT DESCRIPTION

001	Marking Paint	54.95	GG.8120.431	Sanitary Sewer - Materials & Supplies

VC 00036576 Sanding Discs, Saw Blades 00WGSUPPLY Watkins Glen Supply Inc
10/17/2025 24,492 10 2025 46.68

LINE	DETAIL DESCRIPTION	AMOUNT	ACCOUNT NO	ACCOUNT DESCRIPTION
001	Sanding Discs, Saw Blades	46.68	AA.7120.420	Buildings & Grounds - Repairs & Maintenance

VC 00036603 pvc skate assist for CC 00WGSUPPLY Watkins Glen Supply Inc
10/20/2025 24,492 10 2025 43.51

LINE	DETAIL DESCRIPTION	AMOUNT	ACCOUNT NO	ACCOUNT DESCRIPTION
001	pvc skate assist for CC	43.51	AA.7120.430	Buildings & Grounds - Materials & Supplies

TOTAL VOUCHERS FOR VENDOR: 00WGSUPPLY # OF VOUCHERS: 16 TOTAL AMOUNT: 762.39

VC 00036577 Coper Charges 00000XEROX Xerox Corporation
10/17/2025 24,492 10 2025 107.01

LINE	DETAIL DESCRIPTION	AMOUNT	ACCOUNT NO	ACCOUNT DESCRIPTION
001	Copier Charges	21.40	AA.1410.400	Clerk - Contractual Exp
002	Copier Charges	21.40	FF.8310.400	Water - Contractual
003	Copier Charges	21.40	JT.8110.400	Sewer Admin - Contractual Exp
004	Copier Charges	21.41	EE.0781.500	Contractual Expenses
005	Copier Charges	21.40	GG.8110.400	Sewer - Contractual Exp

TOTAL VOUCHERS FOR VENDOR: 00000XEROX # OF VOUCHERS: 1 TOTAL AMOUNT: 107.01

VC 00036580 Refund: EC Deposit 10/4/25 00ZPYHTILA Zachary or Leeah Pyhtila
10/17/2025 24,492 10 2025 250.00

LINE	DETAIL DESCRIPTION	AMOUNT	ACCOUNT NO	ACCOUNT DESCRIPTION
001	Refund-EC Deposit 10/4/25	250.00	AA.0615.000	Customer Deposits

Voucher Abstract

Village of Watkins Glen

TOTAL VOUCHERS FOR VENDOR: 00ZPYHTILA # OF VOUCHERS: 1 TOTAL AMOUNT: 250.00

TOTAL # OF VOUCHERS: 120 TOTAL AMOUNT: 292,894.35

Voucher Abstract

Village of Watkins Glen

Summary

		Total
AA-General Fund	AA.0200.000	54,163.09
	Total	54,163.09
EE-Electric Enterprise Fund	EE.0121.000	208,182.58
	Total	208,182.58
FF-Water Fund	FF.0200.000	6,484.14
	Total	6,484.14
GG-Sewer Fund	GG.0200.000	684.20
	Total	684.20
HF-Clute Park Redev III ADA Playground	HF.0200.000	14.37
	Total	14.37
HM-BIOSOLIDS DISPOSAL EPG - #8459-009	HM.0200.000	10,800.00
	Total	10,800.00
JT-Catharine Valley Water Reclamation Facility	JT.0200.000	12,565.97
	Total	12,565.97
Total		292,894.35